Spare parts manual

en

SAB 193–233–283 A-Frame
Screw compressor unit

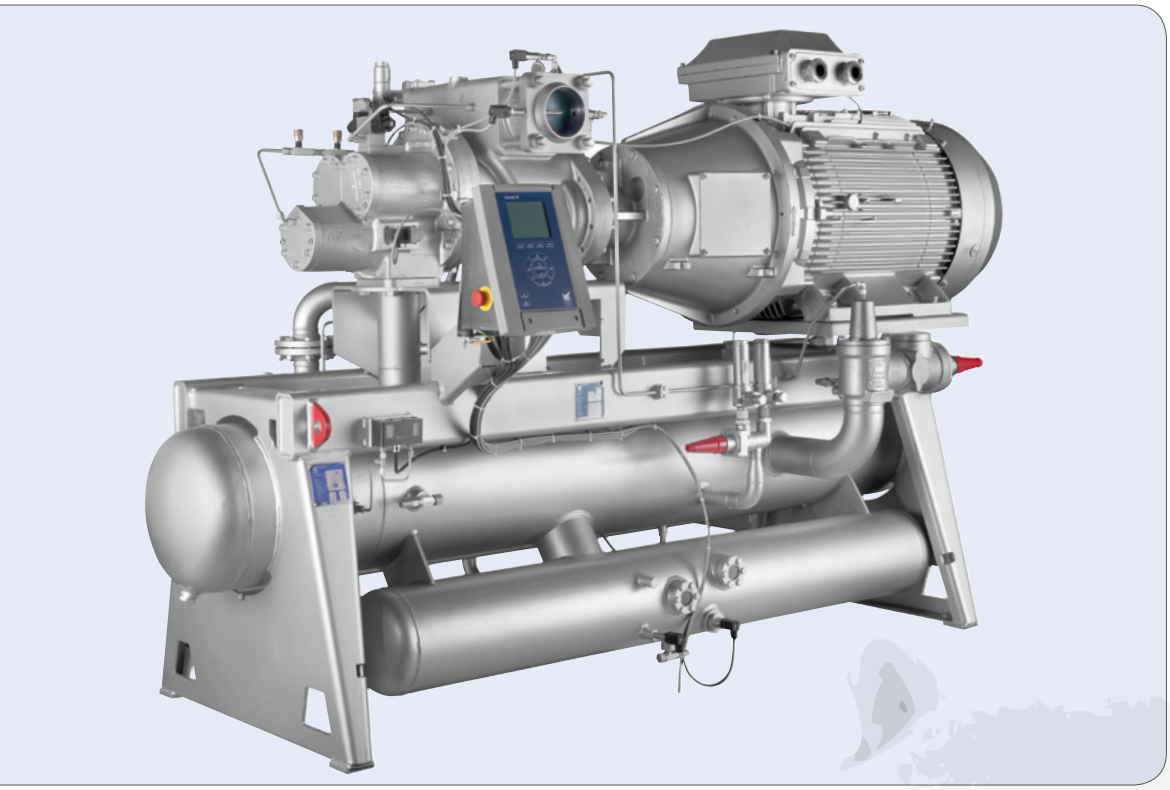

SABROE

Johnson Controls

Contents

1. Spare parts list SAB 193/233/283S A-frame 4

1.1 How to use the spare parts list 4

1.2 Amendments 6

1.3 Recommended spare parts 6

1.4 Spare parts kits and sets. 7

1.5 General arrangement SAB 193/233/283S 13

1.6 Screw compressor, typical (SGC 1913/1918 shown) 16

1.7 Oil separators OHU4123 and OHU4136, typical 19

1.8 Compressor safety valve 23

1.9 Oil filter - single, typical for oil separator OHU 4123 24

1.10 Oil filter - single, for oil separator OHU 4136. 26

1.11 Oil filter, dual, typical - for oil separator OHU4123 28

1.12 Oil filter - dual, typical – for oil separator OHU 4136 29

1.13 Oil cooler piping, typical (SAB 193/233/283S/L) 31

1.14 Oil pump 33

1.15 Coupling assembly 35

1.16 Alignment tool for coupling 38

1.17 Liquid injection 39

1.18 Economizer 41

1.19 Suction/discharge/service/stop valve 42

1.20 Spare parts list for all suction/discharge/service/stop valves 43

1.21 Discharge stop/check valve 44

1.22 Piping and instrumentation, typical 46

1. Spare parts list SAB 193/233/283S A-frame

1.1 How to use the spare parts list

SAB Rotary screw compressor unit

This spare parts list applies to standard Sabroe rotary screw compressor units, models SAB 193/233/283.

The compressor range covers two different oil separators:
OHU 04123/2719 D1 and the bigger OHU 04136/3231 D2 hereafter called OHU 04123 and OHU 04136 respectively. SAB 193 are using both of them depending of the operating conditions.

Units built with special options, modifications or conversions are not considered.

Item numbers only apply to units with PED (Pressure Equipment Directive 97/23/EC) approval when this is relevant.

Concerning rotary screw compressors (models SGC) and Unisab control systems, please refer to the specific spare parts lists.

The spare parts list provides identification for detail parts by *Figure* and *Index number* (*Fig-Index* column), *P&I reference, Item number* and *Description*.

To find the correct replacement item, locate the item in Figure 1, 2, etc. Note the *Index number* and refer to the corresponding *Fig-Index* in the spare parts list to see *Item number* and *Description*.

Note: Some fig-index numbers have a prefixed "F:", eg. F:1-44. This refers to the service parts list for SGC compressors, Frick document No. 070.650-SPL (Oct 2016).

Consider that some parts depend on voltage, set pressure etc. and that your unit may have a special modification.

Quantity per assembly or item is stated in the *Qty.* column and always applies to each unit unless otherwise specified. If the quantity is 0 (zero) this either means that the *Item number* is included as information only or it may be that the actual quantity is stated elsewhere eg under *Description* or in a footnote.

Some of the *Item Numbers* are included for information purposes only and are not usually considered spare parts.

If the word "Assembly" (not the abbreviation "Ass.") is included in *Description*, the *Item number* may be included for information purposes only and is not necessarily a spare part. Please contact Refrigeration Parts Centre for more information.

The *P&I Ref.* column contains the connection designation of the item as shown in a typical P&I diagram (see fig. 16) as well as the P&I diagram of your particular unit when this is relevant. A reference like P128 means item no. 128 and can only be seen in your specific P&I diagram.

Note: The 3-digit numbers do not refer to the spare parts list. They refer to the legend in the Operating manual and the Engineering, Service and Maintenance manual.

Unit of measure in the *Description* column etc. is always stated in SI-units unless otherwise specified, eg subfixed " if in inches.

American drawing standards, third angle projection method, are used in all figures.

Abbreviations for more than one item or model eg:

SAB 193/233S/L means SAB 193 S + SAB 193 L + SAB 233 S + SAB 233 L

LG-1/2/3 means LG-1 + LG-2 + LG-3

Abbreviations in this manual include:

Ang.	angle	OD=	outside diameter equal to
Ass.	assembly	Rc.	cooling medium refrigerant
Cp.	compressor	Reg	regulating
DN (+space)	nominal diameter	Sc.	seal cap
f.	for	Ser.	service
g	gauge	Str.	straight
Hex.	hexagon	Wc.	cooling medium water
ID=	inside diameter equal to	ø	diameter (ISO-standard)
L=	length equal to		
N/A	not applicable or not available		

The unit pipe system name plate (example below) listing unit pipe system type, year and identification number etc., is attached to the frame below the compressor.

Note: Please provide Sabroe unit pipe system type, year and identification number when requesting a quotation or placing an order. Failure to include this information may delay the processing of your request.



1.2 Amendments

2019.03	Oil separator OHU4123 has been added as optional. Change of coalescer element, ref. TI2019/02 Spare parts kits and sets added as chapter 1.4 Change of pressure transmitters, ref. TI2018/04
2020.04	Oil pump KRACHT added to replace VIKING Compressor SAB 283 S/L added Improved coupling added, Ref. TI2019/08.

1.3 Recommended spare parts

A number of kits have been defined for specific service jobs - filter inspection and oil separator inspection, in addition sets for overhaul of compressors and compressor units have been defined with contents related to the individual compressor types.

Note: Consider that your unit may have special modifications. When ordering for more than one unit, the quantity should be adjusted to meet your individual requirements.

1.4 Spare parts kits and sets.

Fig-Index	Item number	Description	Qty.	SAB193S	SAB193L	SAB233S	SAB233L	SAB233E	SAB283S	SAB283L
		Filter kits								
	3088.611	**Kit A - Filter kit - SAB 193 S A-Frame**		X						
05-24	1336.075	Gasket ø141/216x1.5	1							
05-25	2356.1000	Gasket Flat 109/95x2	1							
06-02, 06-10 07-02, 07-10	720M0174G01EU	Service kit Oil Filter Single (double length) SAB 283S	1							
	3088.612	**Kit A - Filter kit - SAB 193 L A-Frame**			X					
05-24	1336.076	Gasket ø168/251x1.5	1							
05-25	2356.1000	Gasket Flat 109/95x2	1							
06-02, 06-10 07-02, 07-10	720M0174G01EU	Service kit Oil Filter Single (double length) SAB 283S	1							
	3088.614	**Kit A - Filter kit - SAB 233 S A-Frame**				X				
05-24	1336.076	Gasket ø168/251x1.5	1							
05-25	2356.1000	Gasket Flat 109/95x2	1							
05-25	2356.223	Gasket Flat 120/106x2.0	2							
06-02, 06-10 07-02, 07-10	720M0174G01EU	Service kit Oil Filter Single (double length) SAB 283S	1							
	3088.615	**Kit A - Filter kit - SAB 233 L A-Frame**					X			
05-24	1336.077	Gasket ø219/308x1.5	1							
05-25	2356.1000	Gasket Flat 109/95x2	1							
05-25	2356.223	Gasket ø120/106x2.0	2							
06-02, 06-10 07-02, 07-10	720M0174G01EU	Service kit Oil Filter Single (double length) SAB 283S	1							
	3088.616	**Kit A - Filter kit - SAB 233 E A-Frame**						X		
05-24	1336.077	Gasket ø219/308x1.5	1							
05-25	2356.1000	Gasket Flat 109/95x2	1							
05-25	2356.223	Gasket ø120/106x2.0	2							
06-02, 06-10 07-02, 07-10	720M0184G01EU	Service kit Oil Filter single (triple length) SAB 233E-SAB283S/L/E-355	1							
	3088.617	**Kit A - Filter kit - SAB 283 S A-Frame**							X	
05-24	1336.077	Gasket ø219/308x1.5	1							
05-25	2356.1000	Gasket Flat 109/95x2	1							
05-25	2356.223	Gasket ø120/106x2.0	1							
06-02, 06-10 07-02, 07-10	720M0184G01EU	Service kit Oil Filter single (triple length) SAB 233E-SAB283S/L/E-355	1							
	3088.666	**Kit A Filter kit SAB 283 L A Frame**								X
05–24	1336.078	Gasket 308/219x1.5	1							
05–25	2356.1000	Gasket Flat 109/95x2	1							
05–25	2356.223	Gasket ø120/106x2.0	1							
06-02, 06-10 07-02, 07-10	720M0184G01EU	Service kit Oil Filter single (triple length) SAB 233E-SAB283S/L/E-355	1							
		Coalescer kits								
	3088.610	**Kit B - Coalescer kit - SAB 151 & 193 A-Frame — OHU 4123**		X	X					
03-01 / 04-01	1331.604	O-ring HNBR 329.57x5.33 Size-382	1							

Fig-Index	Item number	Description	Qty.	SAB193S	SAB193L	SAB233S	SAB233L	SAB233E	SAB283S	SAB283L
03-08 / 04-08	1517.061	Coalescer element ø292/235x760	1							
	3088.657	**Kit B Coalescer kit - SAB 151 & 193 A-Frame - Frick style element — OHU 4123 (AK)**		X	X					
03-01 / 04-01	1331.604	O-ring HNBR 329.57x5.33 Size-382	1							
03-08 / 04-08	531B0099H01	Coalescer Element EZ-Drain 34LG	1							
	3088.613	**Kit B - Coalescer kit - SAB 193 & 233 & 283 A-Frame — OHU 4136**		X	X	X	X	X	X	X
03-01 / 04-01	1331.604	O-ring HNBR 329.57x5.33 Size-382	2							
03-08 / 04-08	1517.061	Coalescer element ø292/235x760	2							
	3088.658	**Kit B - Coalescer kit - SAB 193 & 233 & 283 A-Frame - Frick style element — OHU 4136 (AL)**		X	X	X	X	X	X	X
03-01 / 04-01	1331.604	O-ring HNBR 329.57x5.33 Size-382	2							
03-08 / 04-08	531B0099H01	Coalescer Element EZ-Drain 34LG	2							
		Overhaul sets								
	3089.062	**Set C - Overhaul set - SAB 193 S**		X						
05-24	1336.075	Gasket ø141/216x1.5	1							
05-25	2356.1000	Gasket ø109/95x2.0	1							
F:1-18	534A0772H03	Nut self locking 1 1/8-12UNF-3B	2							
F:1-21	534B0006H02	Seal rod, Glyd 1.625	2							
F:1-22	534B0006H03	Seal rod, Glyd 3.375	1							
F:1-32	534B0125H02	Lockwasher MB-15	1							
F: 1-44.1 to 44.16	534B0768H01EU	O-ring kit SGC 193	1							
F: 1-19, 1-20, 1-26, 1-27, 1-5, 1-13, 1-23, 1-30, 1-33, 1-39, 1-40, 1-41	534B0841G01EU	Bearing kit SGC 193	1							
F:1-53	534C0187H02EU	Seal ring, Glyd 6	1							
F:1-59, 1-10, 1-8, 1-44.6	534M0163G02EU	Shaft Seal Kit SGC/TDSH-B/SAB 193	1							
06-02, 06-10 07-02, 07-10	720M0174G01EU	Service kit oil filter single (double lenght) SAB 193S/L SAB233S/L/E SAB 283S	1							
F:1-009	959A0054H30	Gasket 7 1/8 OD for 4" ASME CL300 flange	1							
F:1-112	959A0057H05	Gasker, flange, size 1 1/2"	1							
	3089.063	**Set C - Overhaul set - SAB 193 L**			X					
05-24	1336.076	Gasket ø168/251x1.5	1							
05-25	2356.1000	Gasket ø109/95x2.0	1							
F:1-18	534A0772H03	Nut self locking 1 1/8-12UNF-3B	2							
F:1-21	534B0006H02	Seal rod, Glyd 1.625	2							
F:1-22	534B0006H03	Seal rod, Glyd 3.375	1							
F:1-32	534B0125H02	Lockwasher MB-15	1							
F:1-44.1 to 44.16	534B0768H01EU	O-ring kit SGC 193	1							
F: 1-19, 1-20, 1-26, 1-27, 1-5, 1-13, 1-23, 1-30, 1-33, 1-39, 1-40, 1-41	534B0841G01EU	Bearing kit SGC 193	1							
F: 1-53	534C0187H02EU	Seal ring, Glyd 6	2							
F: 1-59, 1-10, 1-8, 1-44.6	534M0163G02EU	Shaft Seal Kit SGC/TDSH-B/SAB 193	1							

Fig-Index	Item number	Description	Qty.	SAB193S	SAB193L	SAB233S	SAB233L	SAB233E	SAB283S	SAB283L
06-02, 06-10 07-02, 07-10	720M0174G01EU	Service kit oil filter single (double lenght) SAB 193S/L SAB233S/L/E SAB 283S	1							
F: 1-109	959A0054H30	Gasket 7 1/8 OD for 4" ASME CL300 flange	1							
F: 1-112	959A0057H05	Gasker, flange, size 1 1/2"	1							
	3089.068	**Set C - Overhaul set - SAB 233 S**				X				
05-24	1336.076	Gasket ø168/251x1.5	1							
05-25	2356.223	Gasket Flat 120/106x2.0	1							
F: 2-82	534A0772H02	Nut self locking 1 1/4-12UNF-3B	2							
F: 2-43	534B0006H04	Seal rod, Glyd 1.750	2							
F: 2-44	534B0006H05	Seal rod, Glyd 3.625	1							
F: 2-46	534B0079H01	Slydring Dia. 7 1/4	1							
F: 2-83	534B0125H07	Lock washer dia. 80/95x1.8 MB 16	1							
F: 2-900 to -917	534B0769H01EU	O-ring kit SGC 233	1							
F: 2-48, 2-49, 2-50, 2-81, 2-61, 2-77, 2-17, 2-111, 2-51, 2-52	534B0842G01EU	Bearing kit SGC 233	1							
F: 2-45	534C0187H03EU	Seal Ring Glyd 7-1/4	2							
F: 2-47, 2-66, 2-70, 2-906	534M0163G03EU	Shaft Seal Kit 233	1							
06-02, 06-10 07-02, 07-10	720M0174G01EU	Service kit Oil Filter (double length)	1							
F: 2-95	959A0054H32	Gasket 9 7/8 OD for 6" ASME CL300 flange	1							
F: 2-41	959A0057H07	Gasket, flange, size 2"	1							
	3089.069	**Set C - Overhaul set - SAB 233 L**					X			
05-24	1336.076	Gasket ø168/251x1.5	1							
05-24	1336.077	Gasket ø219/308x1.5	2							
05-25	2356.223	Gasket Flat 120/106x2.0	1							
F: 2-82	534A0772H02	Nut self locking 1 1/4-12UNF-3B	2							
F: 2-43	534B0006H04	Seal rod, Glyd 1.750	2							
F: 2-44	534B0006H05	Seal rod, Glyd 3.625	1							
F: 2-46	534B0079H01	Slydring Dia. 7 1/4	1							
F: 2-83	534B0125H07	Lock washer dia. 80/95x1.8 MB 16	1							
F: 2-900 to -917	534B0769H01EU	O-ring kit SGC 233	1							
F: 2-48, 2-49, 2-50, 2-81, 2-61, 2-77, 2-17, 2-111, 2-51, 2-52	534B0842G01EU	Bearing kit SGC 233	1							
F: 2-45	534C0187H03EU	Seal Ring Glyd 7-1/4	2							
F: 2-47, 2-66, 2-70, 2-906	534M0163G03EU	Shaft Seal Kit 233	1							
06-02, 06-10 07-02, 07-10	720M0174G01EU	Service kit Oil Filter (double length)	1							
F: 2-95	959A0054H33	Gasket 12 1/8 OD for 8" ASME CL300 flange	1							
F: 2-41	959A0057H07	Gasker, flange, size 2"	1							
	3089.070	**Set C - Overhaul set - SAB 233 E**						X		
05-24	1336.076	Gasket ø168/251x1.5	1							
05-24	1336.077	Gasket ø219/308x1.5	2							
05-25	2356.223	Gasket Flat 120/106x2.0	1							
F: 3-77	534A0772H02	Nut self locking 1 1/4-12UNF-3B	2							
F: 3-38	534B0006H04	Seal rod, Glyd 1.750	2							

Fig-Index	Item number	Description	Qty.	SAB193S	SAB193L	SAB233S	SAB233L	SAB233E	SAB283S	SAB283L
F: 3-39	534B0006H05	Seal rod, Glyd 3.625	1							
F: 3-41	534B0079H01	Slydring Dia. 7 1/4	1							
F: 3-78	534B0125H07	Lock washer dia. 80/95x1.8 MB 16	1							
F: 3-900 to -917	534B0769H01EU	O-ring kit SGC 233	1							
F: 3-43, 3-44, 3-45, 3-77, 3-56, 3-72, 3-16, 3-103, 3-46, 3-47	534B0842G01EU	Bearing kit SGC 233	1							
F: 3-40	534C0187H03EU	Seal Ring Glyd 7-1/4	2							
F: 3-42, 3-61, 3-65, 3-906	534M0163G03EU	Shaft Seal Kit 233	1							
06-02, 06-10 07-02, 07-10	720M0184G01EU	Service kit Oil Filter (triple length)	1							
F: 3-91	959A0054H33	Gasket 12 1/8 OD for 8" ASME CL300 flange	1							
F: 3-36	959A0057H07	Gasker, flange, size 2"	1							
	3089.074	**Set C - Overhaul set - SAB 283 S, L**							X	X
05-24	1336.077	Gasket ø219/308x1.5	3							
05–24	1336.078	Gasket ø273/362x1.5								
05-25	2356.224	Gasket ø149/129x2.0	1							
F: 4-86	333Q0001219	Oil Seal 283 S/L/E	1							
F: 4-76	534A0772H01	Nut self locking 1 1/2-12UNF-3B	2							
F: 4-77	534A0035H08	Locknut KM18	1							
F: 4-40	534B0006H06	Seal rod, Glyd 2.250	2							
F: 4-41	534B0006H08	Seal rod, Glyd 4.750	1							
F: 4-43	534B0079H02	Slydring Dia. 9	1							
F: 4-79	534B0125H08	Lockwasher MB-18	1							
F: 4-92 to -109	534B0834H01EU	O-ring kit SGC 283	1							
F: 4-45, 4-46, 4-47, 4-73, 4-59, 4-78, 4-15, 4-91, 4-48, 4-49	534B0843G01EU	Bearing kit SGC 283	1							
F: 4-42	534C0187H04EU	Seal ring, Glyd 9	2							
F: 4-44, 4-62, 4-66, 4-99	534M0163G04EU	Shaft Seal Kit 283	1							
06-02, 06-10 07-02, 07-10	720M0184G01EU	Service kit Oil Filter (triple length)	1							
F: 4-87	959A0054H33	Gasket 12 1/8 OD for 8" ASME CL300 flange	1							
F: 4-36	959A0057H06	Gasker, flange, size 2 1/2"	1							
F: 4-38	959A0057H04	Gasker, flange, size 1 1/4"	1							
		Major overhaul set								
	3089.064	**Set D - Major Overhaul Set - SAB 193 S (OHU 4123)**		X						
	3088.610	Kit B - Coalescer kit - SAB 151 & 193 - A-frame - OHU4123	1							
	3089.062	Set C - Overhaul set - SAB 193 S	1							
	3089.065	**Set D - Major Overhaul Set - SAB 193 L (OHU 4123)**			X					
	3088.610	Kit B - Coalescer kit - SAB 151 & 193 - A-frame - OHU4123	1							
	3089.063	Set C - Overhaul set - SAB 193 L	1							
	3089.066	**Set D - Major Overhaul Set - SAB 193 S (OHU 4136)**		X						

Fig-Index	Item number	Description	Qty.	SAB193S	SAB193L	SAB233S	SAB233L	SAB233E	SAB283S	SAB283L
	3088.613	Kit B - Coalescer kit - SAB 193 & SAB 233 & SAB 283 - A-frame - OHU4136	1							
	3089.062	Set C - Overhaul set - SAB 193 S	1							
	3089.067	**Set D - Major Overhaul Set - SAB 193 L (OHU 4136)**			X					
	3088.613	Kit B - Coalescer kit - SAB 193 & SAB 233 & SAB 283 - A-frame - OHU4136	1							
	3089.063	Set C - Overhaul set - SAB 193 L	1							
	3089.071	**Set D - Major Overhaul Set - SAB 233 S (OHU 4136)**				X				
	3088.613	Kit B - Coalescer kit - SAB 193 & SAB 233 & SAB 283 - A-frame - OHU4136	1							
	3089.068	Set C - Overhaul set - SAB 233 S	1							
	3089.072	**Set D - Major Overhaul Set - SAB 233 L (OHU 4136)**					X			
	3088.613	Kit B - Coalescer kit - SAB 193 & SAB 233 & SAB 283 - A-frame - OHU4136	1							
	3089.069	Set C - Overhaul set - SAB 233 L	1							
	3089.073	**Set D - Major Overhaul Set - SAB 233 E (OHU 4136)**						X		
	3088.613	Kit B - Coalescer kit - SAB 193 & SAB 233 & SAB 283 - A-frame OHU4136	1							
	3089.070	Set C - Overhaul set - SAB 233 E	1							
	3089.075	**Set D - Major Overhaul Set - SAB 283 S/L (OHU 4136)**							X	X
	3088.613	Kit B - Coalescer kit - SAB 193 & SAB 233 & SAB 283 - A-frame - OHU4136	1							
	3089.074	Set C - Overhaul set - SAB 283 S,L.	1							
	3089.121	**Set D Major Overhaul Set- SAB 193 S (OHU 4136) (AL)**		X						
	3088.658	Kit B - Coalescer kit - SAB 193 & 233 & 283 A-Frame - Frick style element — OHU 4136 (AL)	1							
	3089.062	Set C - Overhaul set - SAB 193 S	1							
	3089.122	**Set D - Major overhaul Set- SAB 193 L (OHU 4136) (AL)**			X					
	3088.658	Kit B - Coalescer kit - SAB 193 & 233 & 283 A-Frame - Frick style element — OHU 4136 (AL)	1							
	3089.063	Set C - Overhaul set - SAB 193 L	1							
	3089.090	**Set D - Major overhaul Set- SAB 193 S (OHU 4123) (AK)**		X						
	3088.657	Kit B - Coalescer kit - SAB 151 & 193 A-Frame - Frick style element — OHU 4123 (AK)	1							
	3089.062	Set C - Overhaul set - SAB 193 S	1							
	3089.091	**Set D- Major Overhaul Set - SAB 193 L (OHU 4123) (AK)**			X					
	3088.657	Kit B - Coalescer kit - SAB 151 & 193 A-Frame - Frick style element — OHU 4123 (AK)	1							

Fig-Index	Item number	Description	Qty.	SAB193S	SAB193L	SAB233S	SAB233L	SAB233E	SAB283S	SAB283L
	3089.063	Set C - Overhaul set - SAB 193 L - A-frame	1							
	3089.123	**Set D - Major Overhaul Set - SAB 233 S (OHU 4136) (AL)**				X				
	3088.658	Kit B - Coalescer kit - SAB 193 & 233 & 283 A-Frame - Frick style element — OHU 4136 (AL)	1							
	3089.068	Set C - Overhaul set - SAB 233 S	1							
	3089.124	**Set D - Major Overhaul Set - SAB 233 L (OHU 4136) (AL)**					X			
	3088.658	Kit B - Coalescer kit - SAB 193 & 233 & 283 A-Frame - Frick style element — OHU 4136 (AL)	1							
	3089.069	Set C - Overhaul set - SAB 233 L	1							
	3089.125	**Set D - Major Overhaul Set - SAB 233 E (OHU 4136) (AL)**						X		
	3088.658	Kit B - Coalescer kit - SAB 193 & 233 & 283 A-Frame - Frick style element — OHU 4136 (AL)	1							
	3089.070	Set C- Overhaul set - SAB 233 E	1							
	3089.126	**Set D - Major Overhaul Set - SAB 283 S,L (OHU 4136) AL)**							X	X
	3088.658	Kit B - Coalescer kit - SAB 193 & 233 & 283 A-Frame - Frick style element — OHU 4136 (AL)	1							
	3089.074	Set C- Overhaul set - SAB 283 S/L	1							
E) DN50 tube system.										
F) DN65 tube system.										
AJ) After January 2015.										
AK) After July 2017.										
AL) After Release in 2020.										

1.5 General arrangement SAB 193/233/283S

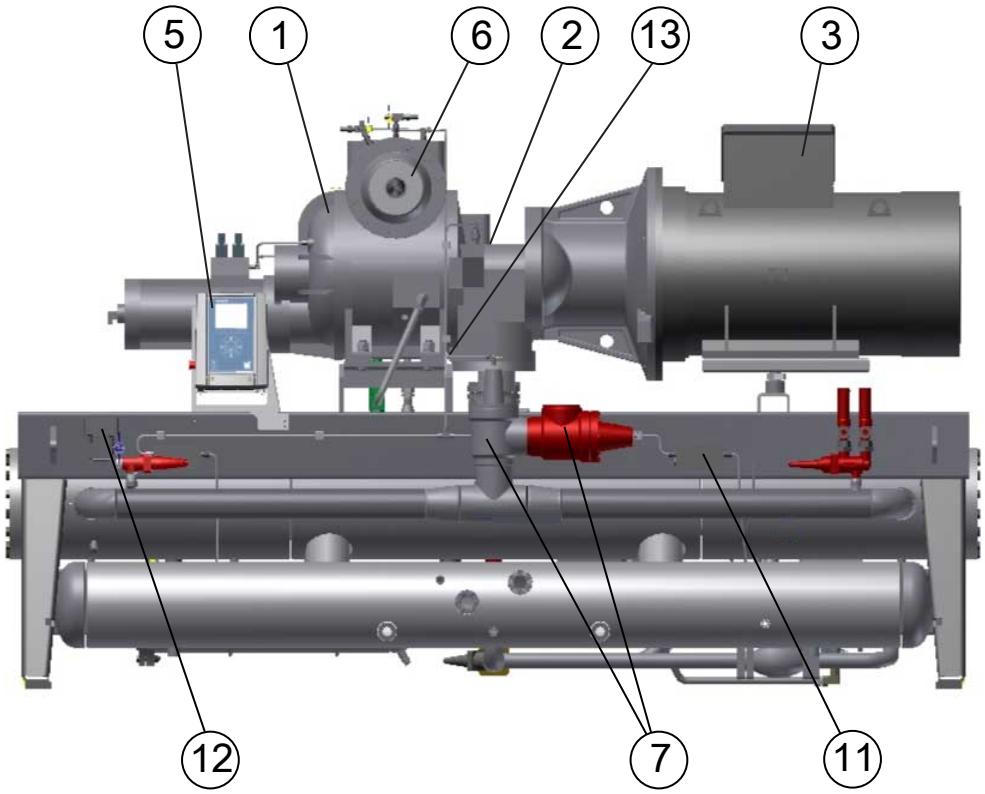

Fig. 1

General arrangement SAB 193/233/283S

Fig-Index	P&I Ref.	Item number	Description	Qty.	SAB193S	SAB193L	SAB233S	SAB233L	SAB233E	SAB283S	SAB283L
01-01		INF	See further information f. compressor in fig.2.	1	X	X	X	X	X	X	X
01-02		INF	See further information for coupling in fig.12	1	X	X	X	X	X	X	X
01-03		INF	See further information for motor in the Operating manual	1	X	X	X	X	X	X	X
01-04		UI	Unused Index	0							
01-05		INF	See further information for controlsin the Unisab manual	1	X	X	X	X	X	X	X
01-06		SUC	Concerns suction stop and check valves (J)	1	X	X	X	X	X	X	X
01-06	P101	1361.197	Stop valve, Ang., Sc., SVA-ST 125	1	X						
01-06	P101	1361.198	Stop valve, Ang., Sc., SVA-ST 150	1	X	X	R	R			
01-06	P101	1361.199	Stop valve, Ang., Sc., SVA-ST 200	1		X	X	X	R	R	
01-06	P101	2412.620	Stop valve, Ang., Sc., SVA-DH 250	1			S	S	X	X	R
01-06	P101	1361.135	Stop valve, Ang., Sc., SVA-DH 300	1					S	S	S
01-06	TE-1, P151	1373.346	Temperature sensor ind. pocket L=130 PT100 G1/4	1	X	X	X	X	X	X	X
01-06		1349.135	Seal ring bonded for G1/4A (for Pocket sealing)	1	X	X	X	X	X	X	X

Fig-Index	P&I Ref.	Item number	Description	Qty.	SAB193S	SAB193L	SAB233S	SAB233L	SAB233E	SAB283S	SAB283L
01-06	PE-4, P158	3084.860	Pressure transducer, -1/9 bar 4–20 mA	1	X	X	X	X	X	X	X
01-06	P129	1364.1002	Check valve, 5", champion (from 2016)	1	X						
01-06	P129	1364.1003	Check valve, 6", champion (from 2016)	1		X	X				
01-06	P129	1364.1004	Check valve, 8", champion (from 2016)	1				X	X	X	
01-06	P129	1364.1005	Check valve, 10", champion (from 2016)	1							X
01-06		1336.075	Gasket 141/216 x1.5 for flange 5"	2	X						
01-06		1336.076	Gasket 168/251 x1.5 for flange 6"	2		X	X				
01-06		1336.077	Gasket 219/308 x1.5 for flange 8"	2				X	X	X	
01-06		1336.078	Gasket 273/362 x1.5 for flange 10”	1							X
01-07		DIS	Discharge stop and check valves (J) (Q)	0	X	X	X	X	X	X	X
01-07	P102	1361.196	Stop valve, Ang., Sc., SVA-S 100	1	X	X					
01-07	P102	1361.197	Stop valve, Ang., Sc., SVA-S 125	1			X	X	X		
01-07	P102	1361.198	Stop valve, Ang., Sc., SVA-S 150	1						X	X
01-07	P102	1361.199	Stop valve, Ang., Sc., SVA-S 200 (V)	1						X	X
01-07	P126	1372.602	Check valve KDC DN100 HP (T)	1	X	X					
01-07	P126	1372.607	Check valve KDC DN100 B (U)	1	X	X					
01-07	P126	1372.603	Check valve KDC 125 HP (T)	1			X	X	X		
01-07	P126	1372.608	Check valve KDC 125 B (U)	1			X	X	X		
01-07	P126	1372.604	Check valve KDC DN150 HP (T)	1						X	X
01-07	P126	1372.609	Check valve KDC DN150 B (U)	1						X	X
01-07	P126	1372.605	Check valve KDC DN200 HP (T)(V)	1						X	X
01-07	P126	1372.610	Check valve KDC DN200 B (U)(V)	1						X	X
01-07	P107	1361.1004	Stop needle valve SNV-ST 1/4 MPT-CD6 (Purge valve)	1	X	X	X	X	X	X	X
01-08		INF	See further information for single oil filter in fig.6 and fig.7. double oil filter in fig.8 and fig.9.	0	X	X	X	X	X	X	X
01-09		INF	See further information for oil separator in fig.3 and fig.4	0	X	X	X	X	X	X	X
01-10		INF	See further information for oil pump in fig.11	0	X	X	X	X	X	X	X
01-11	P200	3447.649	Oil return valve EVRB	1	X	X	X	X	X	X	X
		1377.246	Repair kit for oil return valve	1	X	X	X	X	X	X	X
01-12	P159	1373.132	Pressure switch 8-32bar M12x1.5 KP7ABS	1	X	X	X	X	X	X	X
01-12	P159	1373.1019	Pressostat Penn P78PLM-9750 0 to 30 Bar	1	X	X	X	X	X	X	X
01-12		1523.1001	KP7 Damper-mat. (AJ)	1	X	X	X	X	X	X	X
01-13	PE-3, P157	3084.861	Pressure transducer, -1/25bar 4–20mA	1	X	X	X	X	X	X	X
			Suction Check Valve by-pass (optional)								
01-14		1361.117	Stop/needl Valve SNV-ST 10 C	1	X	X	X	X	X	X	X
01-15		1364.021	Check Valve RHD10L PTFE	1	X	X	X	X	X	X	X
			Balance Piston (SB2) pressure regulation (optional)	1							
01-16		1379.038	Valve Body ICV25 DN20, PN52	1	X	X	X	X	X	X	X
01-16		1379.025	ICS 25 Top Cover, 3 pilots	1	X	X	X	X	X	X	X
01-16		1379.019	ICS 25-20 Function module HCFC/CFC/ R717/R744	1	X	X	X	X	X	X	X
01-16		1372.1005	Valve Pilot CVPP–M 52 Bar	1	X	X	X	X	X	X	X
01-16		1372.298	Valve house CVH 1/4in RG	1	X	X	X	X	X	X	X
01-16		1336.024	Gasket Set EVM	1	X	X	X	X	X	X	X

Fig-Index	P&I Ref.	Item number	Description	Qty.	SAB193S	SAB193L	SAB233S	SAB233L	SAB233E	SAB283S	SAB283L
01-16		1372.335	Pilot valve EVM/NC with 3mm nozzle excl. Coil	1	X	X	X	X	X	X	X
01-16		1372.330	Coil 10w 220/230V 50/60Hz EVM	1	X	X	X	X	X	X	X
01-16		1372.331	Coil 10w 110V 50/60Hz	1	X	X	X	X	X	X	X
01-16		1372.334	Coil 10w 240V 50Hz	1	X	X	X	X	X	X	X
01-16		3041.007	Plug f.PM valve Temp. Reg. system	1	X	X	X	X	X	X	X
01-17		1541.263	Pressure Gauge 63 mm -1/25 Bar, R717, M12x1.5	1	X	X	X	X	X	X	X
J) Spare parts kits and sets for stop valve in fig.15											
Q) Spare parts kits and sets for check valve in fig.16											
R) Only with refrigerant R717											
S) Only with refrigerant HCFC/HFC											
T) Only at high stage operating mode											
U) Only at booster operating mode											
V) Oversize valve											
AJ) After Januar 2015											

1.6 Screw compressor, typical (SGC 1913/1918 shown)

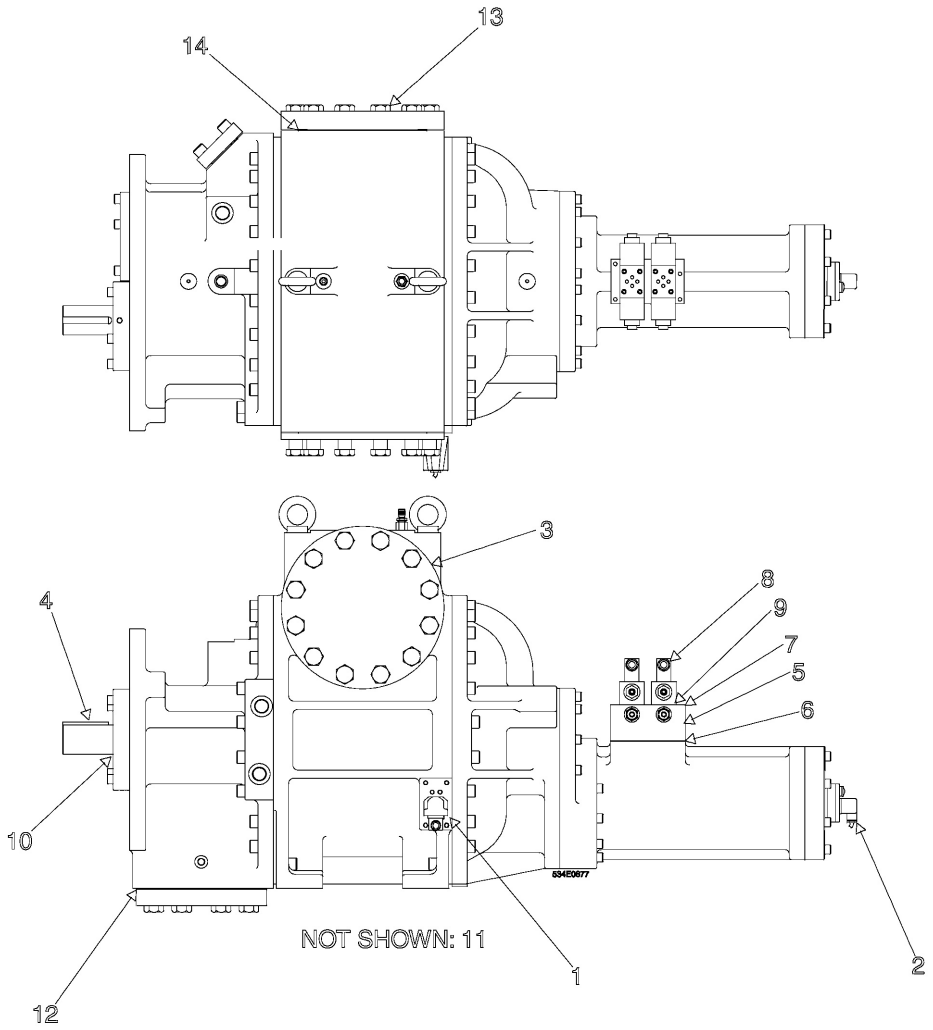

Note: See fig. 17–21 for compressor port locations

Fig. 2

Screw compressor, typical (SGC 1913/1918 shown)

Fig-Index	P-&I Ref.	Item number	Description	Qty.	SAB193S	SAB193L	SAB233S	SAB233L	SAB233E	SAB283S	SAB283L	SAB283E	SAB283X
02-		534E0672G01 5253561	Screw compressor SGC 1913	1	X								
02-		534E0672G02 5253562	Screw compressor SGC 1918	1		X							
02-		534E0697G01 5253565	Screw compressor SGC 2313	1			X						
02-		534E0697G02 5253566	Screw compressor SGC 2317	1				X					
02-		534E0708G01 5253567	Screw compressor SGC 2321	1					X				
02-		534E0753G01 5253568	Screw compressor SGC 2813	1						X			

Fig-Index	P-&I Ref.	Item number	Description	Qty.	SAB193S	SAB193L	SAB233S	SAB233L	SAB233E	SAB283S	SAB283L	SAB283E	SAB283X
02-		534E0753G02 5253569	Screw compressor SGC 2817	1							X		
02-		534D1270G01 5253570	Screw compressor SGC 2821	1								X	
02-		534D1450G01 5253571	Screw compressor SGC 2824	1									X
02-01		534C1478H01	Transmitter assy. linear (Slide stop) (P)	1	X	X	X	X	X	X	X	X	X
02-01		534C1478H02	Transmitter less well linear (less well)	1	X	X	X	X	X	X	X	X	X
02-01		534C1314H01	Rod, Indicator 193 & 233 (P)	1	X	X	X	X	X				
02-01		534C1314H02	Rod, Indicator SAB 283 (P)	1						X	X	X	X
02-01		534A0032H02	Spring (not part of assembly) (P)	1	X	X	X	X	X	X	X	X	X
02-01		980A0012K62	O-ring HNBR 16.36x2.21 Size-908 (not part of assembly) (P)	1	X	X	X	X	X	X	X	X	X
02-02		534D1251H01	Transmitter assy linear position (Slide valve) (P)	1	X	X	X	X	X	X	X	X	X
02-02		534D1251H03	Transmitter less well linear position	1	X	X	X	X	X	X	X	X	X
02-02		980A0012K60	O-ring HNBR 11.89x1.98 Size-906	1	X	X	X	X	X	X	X	X	X
02-03		1336.075	Gasket 141/216 x1.5, suction side, 5”	1	X	X							
02-03		1336.076	Gasket 168/251 x1.5, suction side, 6”	1		X	X	X	X				
02-03		1336.077	Gasket 219/308 x1.5, suction side, 8”	1					X	X	X	X	X
02–04		534A0662H02	Sqvare key 193 (P)	1	X	X							
02-04		534A0662H03	Sqvare key 233 (P)	1			X	X	X				
02-04		534A0662H04	Sqvare key 283-355 (P)	1						X	X	X	X
02-05	SC-1/2 SC-3/4 BP	535E0122H11	Flow Regulator Needle valve SGC	5	X	X	X	X	X	X	X	X	X
02-05		535E0122H01	Manifold Block, Normal Flow, YUKEN "70"	1	X	X	X	X	X	X	X	X	X
02-06		980A0012A61	O-ring HNBR 10.77x2.62 Size-111, manifold to compressor	4	X	X	X	X	X	X	X	X	X
02-07		1413.307	Hex socket cap screw M6x80 12.9	4	X	X	X	X	X	X	X	X	X
02-08	YY-1/2	1372.489	Control Block & 2 x Sol. Valve Assy. 110/120V 50/60Hz DC rectified (Y)	2	X	X	X	X	X	X	X	X	X
02-08	YY-1/2	1372.487	Control Block & 2 x Sol. Valve Assy. 220/240V 50/60Hz DC rectified (Y)	2	X	X	X	X	X	X	X	X	X
02–08		1372.2015	Coil for solenoid valve 120V DC	4	X	X	X	X	X	X	X	X	X
02–08		1372.2014	Coil for solenoid valve 240V DC	4	X	X	X	X	X	X	X	X	X
02-08		1554.1718	Connector with rectifier GDME-211-RA-10	2	X	X	X	X	X	X	X	X	X
02-08		1554.1719	Connector with rectifier GDME-211-RB-10	2	X	X	X	X	X	X	X	X	X
02-08		1554.159	Gasket GDM 3–7. DIN cable connector	4	X	X	X	X	X	X	X	X	X
02–09		951A0113H20	Seal kit solenoid Valve DSG-01 "70"	2	X	X	X	X	X	X	X	X	X
02-10		INF	See further information (P)	0	X	X	X	X	X	X	X	X	X
02-11		UN	Unvsed index	0	X	X	X	X	X	X	X	X	X
02–12		959A0054H30	Gasket 7 1/8 OD for 4" ASME Cl.300 Flange	1	X								
02–12		1336.076	Gasket 168/251 x1.5mm	1		X	X						
02–12		1336.077	Gasket 219/308 x1.5mm	1				X	X	X	X	X	X
02–13		534C1264H01	Strainer, Suction Frick SGC 1913	1	X								
02–13		534C1264H02	Strainer, Suction Frick SGC 1918-2313	1		X	X						
02–13		534C1264H03	Strainer, Suction Frick SGC 233	1				X	X				

Fig-Index	P-&I Ref.	Item number	Description	Qty.	SAB193S	SAB193L	SAB233S	SAB233L	SAB233E	SAB283S	SAB283L	SAB283E	SAB283X
02–13		534C1264H05	Strainer suction 2813 SAB 283 S	1						X			
02-13		534C1264H04	Strainer, suction 2817 / 2821 SAB 283 L / 283 E	1							X	X	X
02–14		959A0054H31	Gasket 8 1/2 OD for 5" ASME Cl. 300 Flange	1	X								
02–14		959A0054H32	Gasket 9 7/8 OD for 6" ASME Cl.300 Flange	1		X	X						
02–14		959A0054H33	Gasket 12 1/8 OD for 8" ASME Cl.300 Flange	1				X	X	X	X	X	X
P) See Service Part List for SGC compressor Frick document no. 070.650- SPL													
Y) Including all mounting hardware (coils, cable connectors and gaskets, seal kit)													

1.7 Oil separators OHU4123 and OHU4136, typical

Oil Separator OHU4123

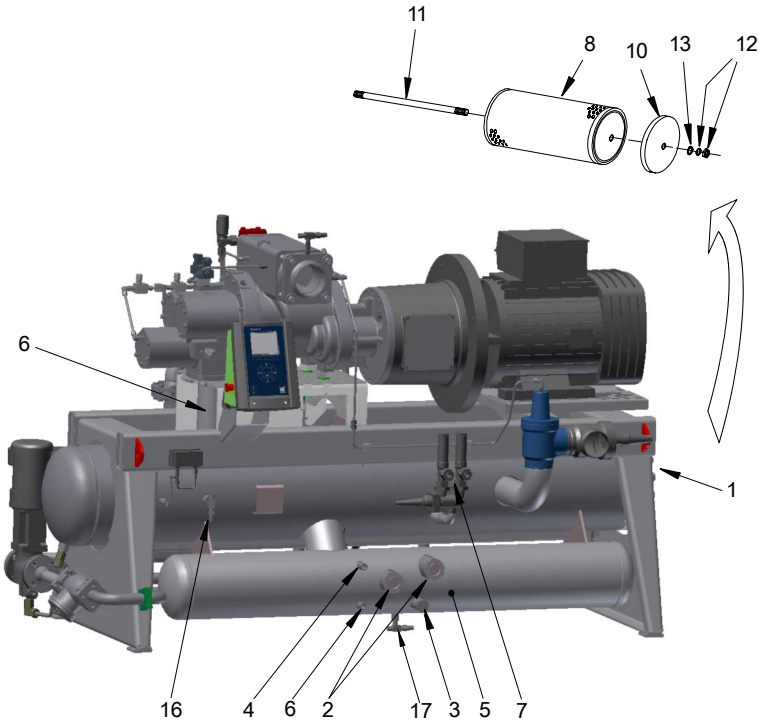

Fig. 3

Fig-Index	P&I Ref.	Item number	Description	Qty.	SAB193S	SAB193L	SAB233S	SAB233L	SAB233E	SAB283S	SAB283L
			Oil Separator OHU4123								
03-	PV-1	4241.405.PED	Oil separator OHU 04123/2719 D1 (Before July.2017)	1	X	X					
03-	PV-1	4241.1425.PED	Oil separator OHU 04123/2719 D1 (After Aug. 2017)	1	X	X					
			External parts (1)								
03-01		1331.604	O-ring HNBR 329.57x5.33 Size-382 Manway	1	X	X					
03-02	LG-1/2 P116/ 117	1226.017	Sightglass Dia.90mm prizm effect (16+34)	2	X	X					
03-02		1331.543	O-ring HNBR 52.07x2.62 Size-137	2	X	X					
03-03	HTR-1/ 2, P161/ 162	3181.034	Heating element wo/thermo 270W 115V G5/4A	2	X	X					
03-03	HTR-1/ 2, P161/ 162	3181.035	Heating element wo/thermo 270W 230V G5/4A	2	X	X					
03-03		1331.403	Dowty-ring G5/4 42.93/52.38x3.25	2	X	X					
03-04	HSL-1, P163	1553.1014	Oil Level Switch 105mm PNP NO 150Bar Oil-T 0-90°C 24V DIN43650	1	X	X					
03-05	LSL-1, P160	1553.1014	Oil Level Switch 105mm PNP NO 150Bar Oil-T 0-90°C 24V DIN43650	1	X	X					
03-05	LSL-1, P160	1553.1013	Oil level switch 105mm NPN NO 24V DIN43650 plug	1	X	X					

Fig-Index	P&I Ref.	Item number	Description	Qty.	SAB193S	SAB193L	SAB233S	SAB233L	SAB233E	SAB283S	SAB283L
03-05		1349.248	Sealing ring 26/21.1x4.5 G1/2A steel	1	X	X					
03-06	TE-2, P152	1373.1011	Temperature sensor PT100 95mm G1/4 KL B w/o plug	1	X	X					
03-06	TE-4, P154	1373.1012	Temperature sensor PT100 130mm, G1/4 RT-B w/o plug	1	X	X					
03-06		1349.135	Seal ring, bonded, for G 1/4 A (H) (for pocket sealing purpose)	1	X	X					
			Safety valve								
03-07	P103	1364.349	Double Stop Valve DSV1 DN25/DN20	1	X	X					
03-07	P104/105	1364.369	Safety valve SFA 15, 18bar g	2	X	X					
03-07	P104/105	1364.370	Safety valve SFA 15, 19bar g	2	X	X					
03-07	P104/105	1364.376	Safety valve SFA 15, 20bar g	2	X	X					
03-07	P104/105	1364.360	Safety valve SFA 15, 21bar g	2	X	X					
03-07	P104/105	1364.361	Safety valve SFA 15, 22 bar g	2	X	X					
03-07	P104/105	1364.362	Safety valve SFA 15, 23 bar g	2	X	X					
03-07	P104/105	1364.363	Safety valve SFA 15, 24 bar g	2	X	X					
03-07	P104/105	1364.365	Safety valve SFA 15, 25 bar g	2	X	X					
03-07	P104/105	1364.371	Safety valve SFA 15, 26 bar g	2	X	X					
03-07	P104/105	1364.422	Safety valve SFA 15, 28 bar g	2	X	X					
03-07		1377.257	Service kit, gaskets for DSV 1	1	X	X					
03-07		1377.255	Service kit, gaskets f. two SFA 15 on DSV 1	1	X	X					
03-07		1377.259	Repair kit f. SFA 15 (gaskets+cone)	1	X	X					
			Internal parts (before July.2017)								
03-08		1517.061	Coalescer Element Dia. 292/235 L=760, Reinforced II	1	X	X					
03-10		3254.658	Cover plate 6x280 OHU 04123/2716	1	X	X					
03-11		2111.125	Stud bolt, M12 x 810.	3	X	X					
03-12		1433.075	Lock nut M12	3	X	X					
			Internal parts (after July. 2017)								
03-08		531B0099H01	Coalescer Element EZ-Drain 34LG	1	X	X					
03-11		2111.1002	Studbolt M12 x 918.	1	X	X					
			External parts (2)								
03-16	P106	1361.118	Stop valve, Ang., Sc., SNV-ST G1/2”	1	X	X					
03-16/17		2356.123	Alu gasket ø18/10x1.5	2	X	X					
03-16/17		2356.283	Gasket Alu 19/14x4 3/4-hard	2	X	X					
03-16/17		2313.027	Cap nut 1/2IN	2	X	X					
H) Quantity is for each sealing purpose											
AC) For package without Unisab control											
AD) For package with Unisab III Only											

Oil Separator OHU 4136

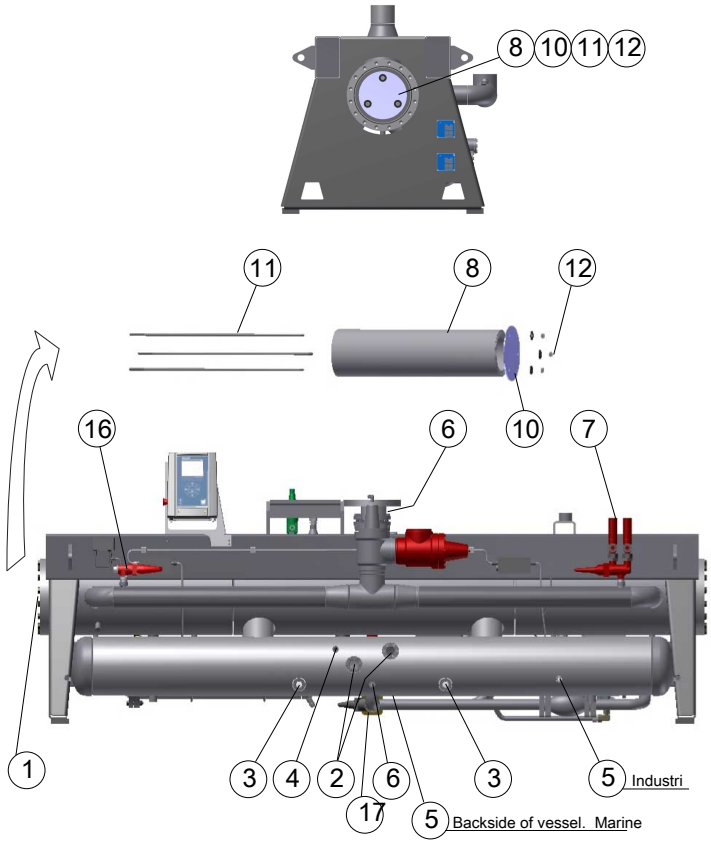

Fig. 4

Fig-In-dex	P&I Ref.	Item number	Description	Qty.	SAB193S	SAB193L	SAB233S	SAB233L	SAB233E	SAB283S	SAB283L
			Oil Separator OHU 4136								
04-	PV-1	4141.406.PED	Oil separator OHU 04136/3231 D2	1	X	X	X	X	X	X	X
04	PV-1	4141.1426.PED	Oil separator OHU 04136/3231 D2/1(to be released 2020)				X	X	X	X	X
			External Parts (1)								
04-01		1331.604	O-ring HNBR 329.57x5.33 Size-382, Manway	1	X	X	X	X	X	X	X
04-02	LG-1/2 P116/117	1226.017	Sightglass Dia.90mm prizm effect (16 +34)	2	X	X	X	X	X	X	X
04-02		1331.543	O-ring HNBR 52.07x2.62 Size-137	2	X	X	X	X	X	X	X
04-03	HTR-1/2, P161/162	3181.034	Heating element wo/thermo 270W 115V G5/4A	2	X	X	X	X	X	X	X
04-03	HTR-1/2, P161/162	3181.035	Heating element wo/thermo 270W 230V G5/4A	2	X	X	X	X	X	X	X
04-03		1331.403	Dowty-ring G5/4 42.93/52.38x3.25	2	X	X	X	X	X	X	X
04-04	HSL-1, P163	1553.1014	Oil Level Switch 105mm PNP NO 150Bar Oil-T 0-90°C 24V DIN43650	1	X	X	X	X	X	X	X
04-05	LSL-1, P160	1553.1014	Oil Level Switch 105mm PNP NO 150Bar Oil-T 0-90°C 24V DIN43650	1	X	X	X	X	X	X	X
04-05	LSL-1, P160	1553.1013	Oil level switch 105mm NPN NO 24V DIN43650 plug	1	X	X	X	X	X	X	X

Fig-Index	P&I Ref.	Item number	Description	Qty.	SAB193S	SAB193L	SAB233S	SAB233L	SAB233E	SAB283S	SAB283L
04-05		1349.248	Sealing ring 26/21.1x4.5 G1/2A steel	1	X	X	X	X	X	X	X
04-06	TE-2, P152	1373.1011	Temperature sensor PT100 95mm G1/4 KL B w/o plug	1	X	X	X	X	X	X	X
04-06	TE-4, P154	1373.1012	Temperature sensor PT100 130mm, G1/4 RT-B w/o plug	1	X	X	X	X	X	X	X
04-06		1349.135	Seal ring bonded for G1/4A (for Pocket sealing) 18/13.3mm	1	X	X	X	X	X	X	X
			Safety valve								
04-07	P103	1364.349	Double Stop Valve DSV1 DN25/DN20	1	X	X	X	X	X	X	X
04-07	P104/105	1364.369	Safety valve SFA 15, 18bar g	2	X	X	X	X	X	X	X
04-07	P104/105	1364.370	Safety valve SFA 15, 19bar g	2	X	X	X	X	X	X	X
04-07	P104/105	1364.376	Safety valve SFA 15, 20bar g	2	X	X	X	X	X	X	X
04-07	P104/105	1364.360	Safety valve SFA 15, 21bar g	2	X	X	X	X	X	X	X
04-07	P104/105	1364.361	Safety valve SFA 15, 22 bar g	2	X	X	X	X	X	X	X
04-07	P104/105	1364.362	Safety valve SFA 15, 23 bar g	2	X	X	X	X	X	X	X
04-07	P104/105	1364.363	Safety valve SFA 15, 24 bar g	2	X	X	X	X	X	X	X
04-07	P104/105	1364.365	Safety valve SFA 15, 25 bar g	2	X	X	X	X	X	X	X
04-07	P104/105	1364.371	Safety valve SFA 15, 26 bar g	2	X	X	X	X	X	X	X
04-07	P104/105	1364.422	Safety valve SFA 15, 28 bar g	2	X	X	X	X	X	X	X
04-07		1377.257	Service kit, gaskets for DSV 1	1	X	X	X	X	X	X	X
04-07		1377.255	Service Kit with Gaskets SFA15/DSV1	1	X	X	X	X	X	X	X
04-07		1377.259	Service Kit with Gaskets SFA15 (gaskets+cone)	1	X	X	X	X	X	X	X
			Internal parts(-2020)								
04-08		1517.061	Coalescer Element Dia. 292/235 L= 760, Reinforced II	1	X	X	X	X	X	X	X
04-10		3254.658	Cover plate 6x280 OHU 04123/2716	1	X	X	X	X	X	X	X
04-11		2111.125	Stud bolt, M12 x 810.	3	X	X	X	X	X	X	X
04-12		1433.075	Lock nut M12	3	X	X	X	X	X	X	X
			Internal parts (To be released 2020)								
04-08		531B0099H01	Coalescer Element EZ-Drain 34LG	2	X	X	X	X	X	X	X
04-11		2111.1002	Studbolt M12 x 918.	2	X	X	X	X	X	X	X
			External parts (2)								
04-16	P108	1361.189	Stop Valve SVA-S 20 D ANG CAP PN 52	1	X	X	X	X	X	X	X
04-17	P106	1361.118	Stop Needle Valve SNV-ST G1/2-G1/2	1	X	X	X	X	X	X	X
04-17		2356.123	Gasket Alu 18/10x1.5	2	X	X	X	X	X	X	X
04-17		2356.283	Gasket Alu 19/14x4 3/4-hard	2	X	X	X	X	X	X	X
04-17		2313.027	Cap nut 1/2IN	2	X	X	X	X	X	X	X
H) Quantity is for each sealing purpose											
AC) For package without Unisab control											
AD) For package with Unisab III Only											

1.8 Compressor safety valve

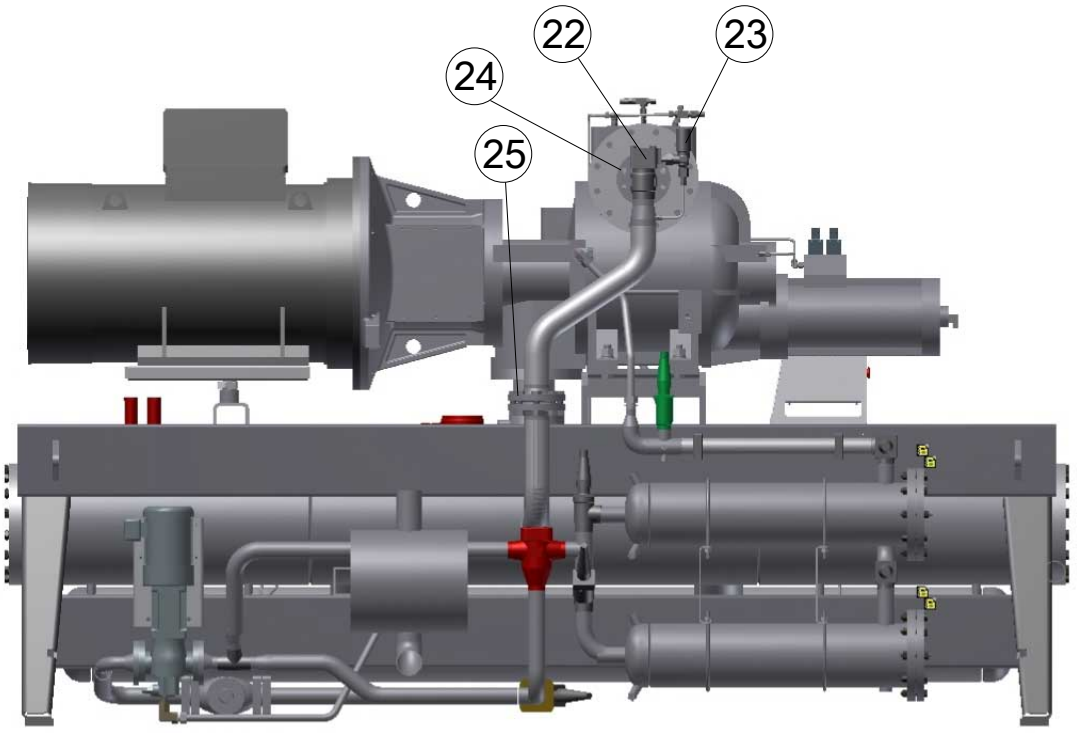

Fig. 5

Compressor safety valve

Fig-Index	P&I Ref.	Item number	Description	Qty.	SAB193S	SAB193L	SAB233S	SAB233L	SAB233E	SAB283S	SAB283L
05–22	P127	2417.232	Pilot controlled safety valve POV 600 DN40	1	R	R					
05-22	P127	1364.348	Pilot controlled Safety Valve POV 1050	1	S	S	R	R	R	R	R
05-22	P127	1364.396	Pilot controlled Safety Valve POV 2150 DN80	1			S	S	S		
05-22	P127	1364.396	Pilot controlled Safety Valve POV 2150 DN80	2						S	S
05-23	P128	2416.203	Safety valve BSV 8 T 220 20bar	1	X	X	X	X	X	X	X
05-23	P128	2416.224	Safety valve BSV 8 T 222 22Bar	1	X	X	X	X	X	X	X
05-23	P128	2416.315	Safety valve BSV8 24bar	1	X	X	X	X	X	X	X
05-23	P128	2356.137	Gasket Alu 30/16x1.5	1	X	X	X	X	X	X	X
05-23	P128	2356.127	Gasket Alu 24/13x1.5	1	X	X	X	X	X	X	X
05-23	P128	1331.427	Dowty ring ø23.80/ø17.28x2.03	1	X	X	X	X	X	X	x
05-24		1336.075	Gasket 141/216 x1.5mm	1	X						
05-24		1336.076	Gasket 168/251 x1.5mm	1		X	X				
05-24		1336.077	Gasket 219/308 x1.5mm	1				X	X	X	
05-24		1336.078	Gasket 362/273 x1.5mm	1							X
05-25		2356.1000	Gasket 109/95 x2.0mm	1	X	X	R	R	R	R	R
05-25		2356.223	Gasket 120/106 x2.0mm	1			S	S	S	S	S
R) Only if refrigerant is R717											
S) Only if refrigerant is HCFC/HFC											
T) All refrigerants											

1.9 Oil filter - single, typical for oil separator OHU 4123

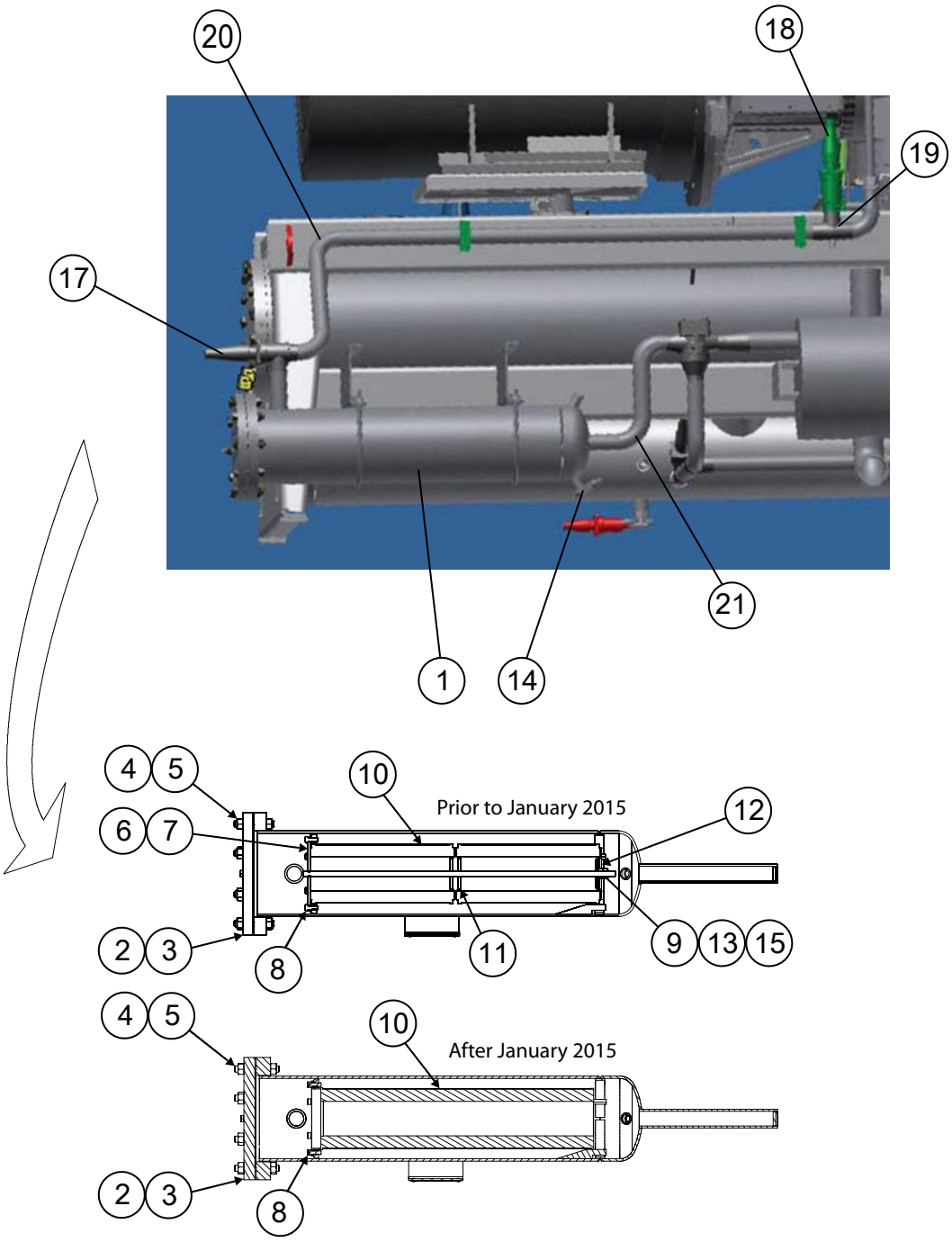

Fig. 6

Oil filter - single for oil separator OHU4123

Fig-Index	P&I Ref.	Item number	Description	Qty.	SAB193S	SAB193L	SAB233S	SAB233L	SAB233E	SAB283S	SAB283L
06-01	OF-1	553E0013EU	Ass., Oil filter OF 2111/DN 40 (D)		1	1					
06-02		959A0082H01EU	Gasket 256/215 x 2	1	X	X					

Fig-Index	P&I Ref.	Item number	Description	Qty.	SAB193S	SAB193L	SAB233S	SAB233L	SAB233E	SAB283S	SAB283L
06-02		2355.253	Gasket 250/225x3mm grooved steel w. graphite on both sides Flexpro style PN	1	X	X					
06-03		553A0001EU	Cover, end	1	X	X					
06-04		1424.109	Hex head bolt M16x80 8.8	10	X	X					
06-05		1432.072	Nut M16 FZB	10	X	X					
			Internal parts (prior to Jan. 2015)								
06-06		535A0144H01	Clamping plate for Oil filter	1	X	X					
06-07		959A0053H01	Gasket ø7-13/16" x 1/8"	1	X	X					
06-08		1413.356	Socket Head Cap Screw M8x20 12.9	6	X	X					
06-08		1436.034	Flat Washer 16/8.4x1.6	6	X	X					
06-09		333Q0001268	Rod CTR 1/2UNC X31-1/2"	1	X	X					
06-10		531A0218H02	Oil filter element Superfilter TM II - 5 Mic.	2	X	X					
06-11		900A0007H01	Seal Centre Filter "Filter Aluminum"	1	X	X					
06-12		900A0008H01	Yoke, bottom	1	X	X					
06-13		1436.005	Washer M12 DIN125B FZB	1	X	X					
06-15		902A0021H01	Nut, hexagon 1/2-13 UNC	2	X	X					
			Internal parts (after Jan. 2015)								
06-08		1413.356	Socket Head Cap Screw M8x20 12.9	6	X	X					
06-08		1436.034	Flat Washer 16/8.4x1.6	6	X	X					
06-10		531B0100H02	Oil Element Superfilter Ii 28 9/16"	1	X	X					
			External parts								
06-14	P121	1361.117	Needle valve SNV-ST CD10-CD10 (J)	1	X	X					
06-14		2313.027	Cap nut 1/2IN	1	X	X					
06-14		2356.123	Gasket Alu 18/10x1.5	1	X	X					
06-14		2356.283	Gasket Alu 19/14x4 3/4-hard	1	X	X					
06-17	P123	1361.192	Stop valve SVA-S 40 D short ANG CAP PN 52 (J)	1	X	X					
06-18	P124	1364.531	Reg. valve, Ang., Sc., REG 40 #10 (J)	1	X	X					
06-19	TE-3 P153	1373.346	Temperature sensor PT100 130mm G1/4 Cl. B w/o plug	1	X	X					
06-19		1349.135	Seal ring bonded for G1/4A (for Pocket sealing) 18/13.3mm	1	X	X					
06-20	PE-1 P155	3084.861	Pressure transmitter -1 to 25 bar JCI P599 4-20mA w/plug	1	X	X					
06-21	PE-2 P156	3084.861	Pressure transmitter -1 to 25 bar JCI P599 4-20mA w/plug	1	X	X					
			Service kits								
		720M0174G01EU	**Service kit oil filter single (double lenght) SAB 193S/L SAB233S/L/E SAB 283S**		1	1					
06–02		959A0082H01EU	Gasket 256/215X2	1							
06-10		531B0100H02	Oil element superfilter Ii 28 9/16"	1							
		720M0174G01E-U-AD2000	**Service kit oil filter PED/AD2000 - SAB 193 S/L, SAB 233 S/L/E**		1	1					
06-02		2355.253	Gasket 250/225x3mm grooved steel w. graphite on both sides Flexpro style PN	1							
06-10		531B0100H02	Oil element superfilter Ii 28 9/16"	1							
D) See cross-sectional view in .fig.6											
J) Spare parts kits and sets for stop valve in Fig. 15.											

1.10 Oil filter - single, for oil separator OHU 4136.

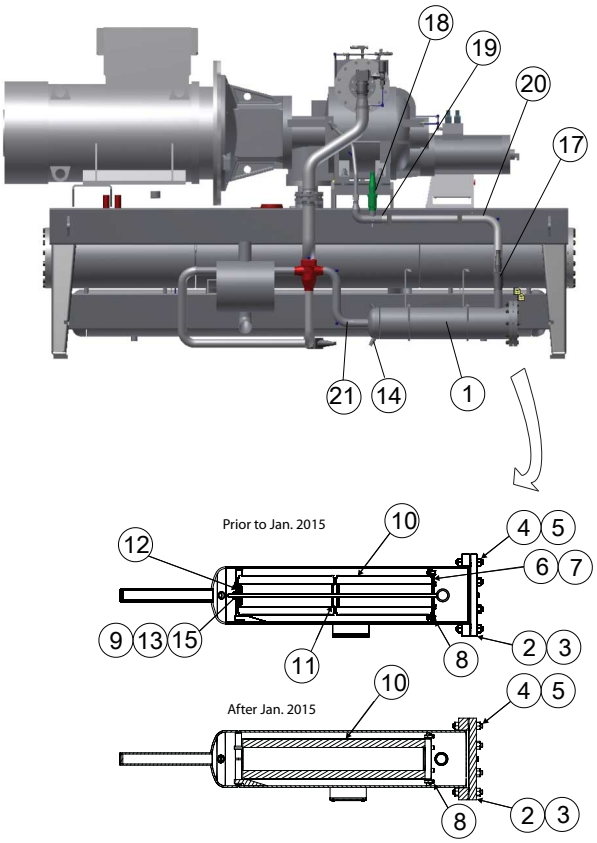

Fig. 7

Oil filter - single, for oil separator. OHU 4136

Fig-Index	P&I Ref.	Item number	Description	Qty.	SAB193S	SAB193L	SAB233S	SAB233L	SAB233E	SAB283S	SAB283L
07-01	OF-1	553E0015EU	Ass., Oil filter OF 2111/DN 50 (D)(E)		1	1	1	1	1	1	
07-01	OF-1	553E0014EU	Ass., Oil filter OF 2115/DN65 (D)(F)						1	1	1
07-02		959A0082H01EU	Gasket 256/215x 2	1	X	X	X	X	X	X	X
07-02		2355.253	Gasket 250/225x3mm grooved steel w. graphite on both sides Flexpro style PN	1	X	X	X	X	X	X	X
07-03		553A0001EU	Cover, end	1	X	X	X	X	X	X	X
07-04		1424.109	Hex head bolt M16x80 8.8	10	X	X	X	X	X	X	X
07-05		1432.072	Nut M16 FZB	10	X	X	X	X	X	X	X
			Internal parts (prior to Jan. 2015)								
07-06		535A0144H01	Clamping plate for Oil filter	1	X	X	X	X	X	X	X
07-07		959A0053H01	Gasket ø7-13/16" x 1/8"	1	X	X	X	X	X	X	X
07-08		1413.356	Socket Head Cap Screw M8x20 12.9	6	X	X	X	X	X	X	X
07-08		1436.034	Flat Washer 16/8.4x1.6	6	X	X	X	X	X	X	X
07-09		333Q0001268	Rod, threaded 1/2-13 UNC x 31-1/2" (E)	1	X	X	X	X	X	X	X
07-09		333Q0001267	Rod, threaded 1/2-13 UNC x 47" (F)	1					X	X	X
07-10		531A0218H02	Oil filter element Superfilter TM II - 5 Mic.(E)	2	X	X	X	X	X	X	
07-10		531A0218H02	Oil filter element Superfilter TM II - 5 Mic.(F)	3					X	X	X
07-11		900A0007H01	Seal Centre Filter "Filter Aluminum"(E)	1	X	X	X	X	X	X	
07-11		900A0007H01	Seal Centre Filter "Filter Aluminum"(F)	2					X	X	X
07-12		900A0008H01	Yoke, bottom	1	X	X	X	X	X	X	X

Fig-Index	P&I Ref.	Item number	Description	Qty.	SAB193S	SAB193L	SAB233S	SAB233L	SAB233E	SAB283S	SAB283L
07-13		1436.005	Washer M12 DIN125B FZB	1	X	X	X	X	X	X	X
07-15		902A0021H01	Nut, hexagon 1/2-13 UNC (PJ)	2	X	X	X	X	X	X	X
			Internal parts (after Jan. 2015)								
07-08		1413.356	Socket Head Cap Screw M8x20 12.9	6	X	X	X	X	X	X	X
07-08		1436.034	Flat Washer 16/8.4x1.6	6	X	X	X	X	X	X	X
07-10		531B0100H02	Oil Element Superfilter Ii 28 9/16" (E)	1	X	X	X	X	X	X	
07-10		531B0100H03	Oil Element Superfilter Ii, 43 5/16" (F)	1					X	X	X
			External parts								
07-14	P121	1361.117	Needle valve SNV-ST CD10-CD10(J)	1	X	X	X	X	X	X	X
07-14		2313.027	Cap nut 1/2IN	1	X	X	X	X	X	X	X
07-14		2356.123	Gasket Alu 18/10x1.5	1	X	X	X	X	X	X	X
07-14		2356.283	Gasket Alu 19/14x4 3/4-hard	1	X	X	X	X	X	X	X
07-17	P123	1361.193	Stop valve, Ang., Sc., SVA-ST 50 (J) (E)	1	X	X	X	X	X	X	
07-17	P123	1361.194	Stop valve SVA-S 65 D long ANG CAP PN52 (J) (F)	1					X	X	X
07-18	P124	1364.531	Reg. valve, Ang., Sc., REG 40 #10 (J)	1	X	X	X	X	X	X	X
07-19	TE-3 P153	1373.346	Temperature sensor PT100 130mm G1/4 Cl. B w/o plug	1	X	X	X	X	X	X	X
07-19		1349.135	Seal ring bonded for G1/4A (for Pocket sealing) 18/13.3mm	1	X	X	X	X	X	X	X
07-20	PE-1 P155	3084.861	Pressure transmitter -1 to 25 bar JCI P599 4-20mA w/plug	1	X	X	X	X	X	X	X
07-21	PE-2 P156	3084.861	Pressure transmitter -1 to 25 bar JCI P599 4-20mA w/plug	1	X	X	X	X	X	X	X
			Service kits								
		720M0174G01EU	**Service kit oil filter single (double length) SAB 193S/L SAB233S/L/E SAB 283S**		1	1	1	1	1	1	
07–02		959A0082H01EU	Gasket 256/215X2	1							
07-10		531B0100H02	Oil element superfilter II 28 9/16"	1							
		720M0174G01E-U-AD2000	**Service kit oil filter PED/AD2000 - SAB 193 S/L, SAB 233 S/L/E**		1	1	1	1	1	1	
07-02		2355.253	Gasket 250/225x3mm grooved steel w. graphite on both sides Flexpro style PN	1							
07-10		531B0100H02	Oil element superfilter II28 9/16"	1							
		720M0184G01EU	**Service kit oil filter single (triple length) SAB233E-SAB283S/L/E-355**						1	1	1
07–02		959A0082H01EU	Gasket 256/215X2	1							
07-10		531B0100H03	Oil Element, Superfilter II, 43 5/16"	1							
		720M0184G01E-U-AD2000	**Service Kit Oil Filter PED/AD2000 - SAB 233 E, SAB 283 S/L/E**						1	1	1
07-02		2355.253	Gasket 250/225x3mm grooved steel w. graphite on both sides Flexpro style PN	1							
07-10		531B0100H03	Oil Element, Superfilter II, 43 5/16"	1							
D) See cross-sectional view in fig.7											
J) Spare parts kits and sets for stop valve in fig.15.											
E) DN50 tube system											
F) DN65 tube system											

1.11 Oil filter, dual, typical - for oil separator OHU4123

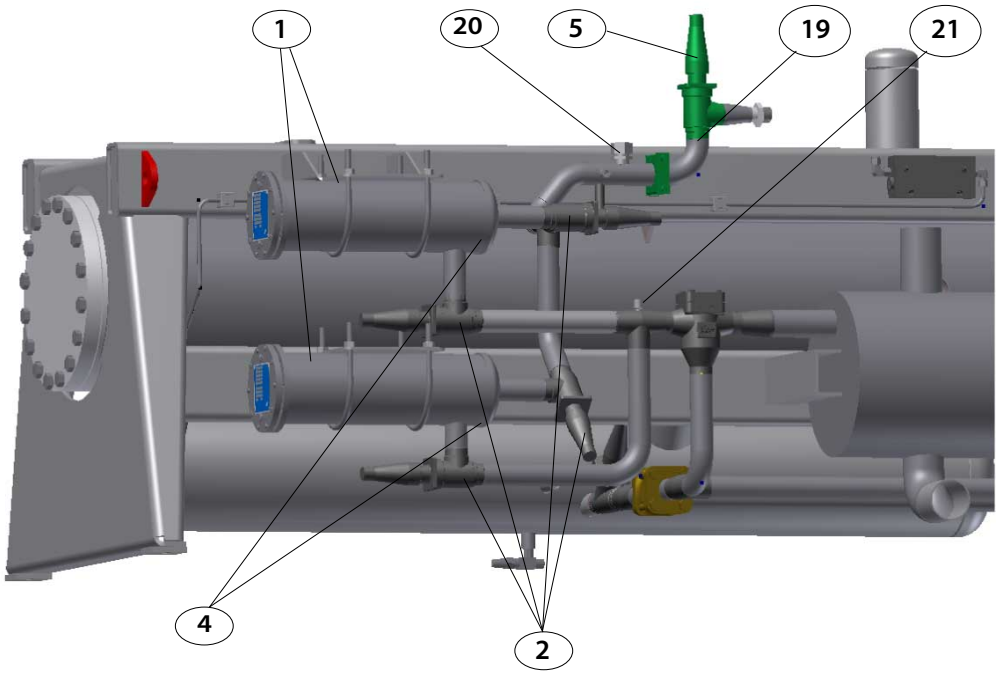

Fig. 8

Oil filter - dual - for oil separator OHU 4123

Fig-Index	P&I Ref.	Item number	Description	Qty.	SAB193S	SAB193L	SAB233S	SAB233L	SAB233E	SAB283L
08-01	OF-1/2	553E0013EU	Ass., oil filter OF2111/DN 40 (D)		2	2				
			External parts							
08-02	P-23/135/136/138	1361.192	Stop valve SVA-S 40 D short ANG CAP PN 52 (J)	4	X	X				
08-04	P121/137	1361.117	Needle valve SNV-ST CD10-CD10 (K) (J)	2	X	X				
08-05	P124	1364.531	Reg. valve, Ang., Sc., REG 40 #10 (J)	1	X	X				
08-19	TE-3,P153	1373.346	Temperature sensor PT100 130mm G1/4 Cl. B w/o plug	1	X	X				
08-19		1349.135	Seal ring bonded for G1/4A (for Pocket sealing) 18/13.3mm	1	X	X				
08-20	PE-1,P155	1373.269	Pressure transmitter AKS 3050 -1-25bar	1	X	X				
08-21	PE-2,P156	1373.269	Pressure transmitter AKS 3050 -1-25bar	1	X	X				
D) See cross-sectional view in Fig.6.										
J) Spare parts kits and sets for stop valve in Fig. 15.										
K) Quantity is for each oil filter.										

1.12 Oil filter - dual, typical – for oil separator OHU 4136

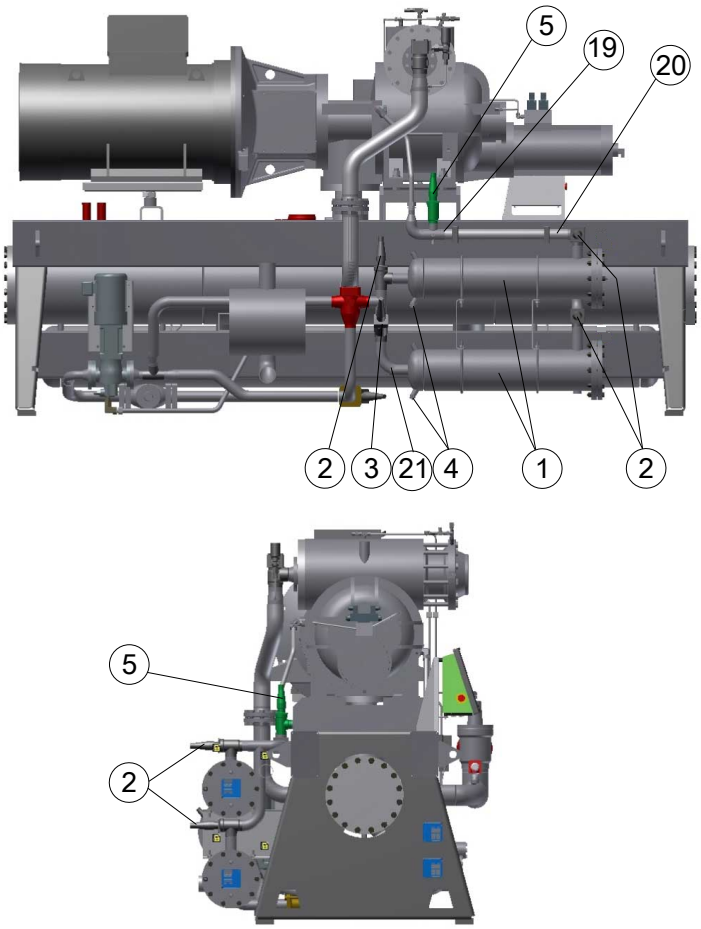

Fig. 9

Oil filter - dual - for oil separator OHU 4136

Fig-Index	P&I Ref.	Item number	Description	Qty.	SAB193S	SAB193L	SAB233S	SAB233L	SAB233E	SAB283S	SAB283L
09-01	OF-1/2	553E0015EU	Oil filter of 2111/DN50 (D) (E)		2	2	2	2	2	2	
09-01	OF-1/2	553E0014EU	Oil filter of 2115 (D) (F)						2	2	2
			External parts								
09-02	P-123/ 136/138	1361.193	Stop valve, Ang., Sc., SVA-ST 50 (J) (E)	3	X	X	X	X	X	X	
09-02	P123/ 136/138	1361.194	Stop valve SVA-S 65 D long ANG CAP PN52 (J) (F)	3					X	X	X
09-03	P135	1361.207	Stop valve SVA-S50 (E)	1	X	X	X	X	X	X	
09-03	P135	1361.208	Stop valve SVA-S 65D cap(F)	1					X	X	X
09-04	P121/ 137	1361.117	Needle valve SNV-ST CD10-CD10 (K) (J)	2	X	X	X	X	X	X	X
09-05	P124	1364.531	Reg. valve, Ang., Sc., REG 40 #10 (J)	1	X	X	X	X	X	X	X
09-19	TE-3, P153	1373.346	Temperature sensor PT100 130mm G1/4 Cl. B w/o plug	1	X	X	X	X	X	X	X
09-19		1349.135	Seal ring bonded for G1/4A (for Pocket sealing) 18/13.3mm	1	X	X	X	X	X	X	X

Fig-Index	P&I Ref.	Item number	Description	Qty.	SAB193S	SAB193L	SAB233S	SAB233L	SAB233E	SAB283S	SAB283L
09-20	PE-1, P155	1373.269	Pressure transmitter AKS 3050 -1-25bar	1	X	X	X	X	X	X	X
09-21	PE-2, P156	1373.269	Pressure transmitter AKS 3050 -1-25bar	1	X	X	X	X	X	X	X
D) See cross-sectional view in fig.7											
J) Spare parts kits and sets for stop valve in fig.15.											
K) Quantity is for each oil filter											
E) DN50 tube system											
F) DN65 tube system											

1.13 Oil cooler piping, typical (SAB 193/233/283S/L)

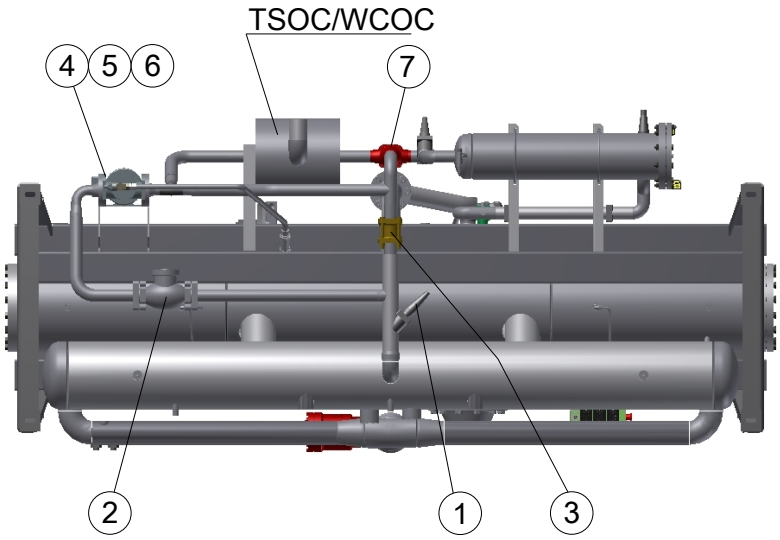

Fig. 10

Parts liste piping

Fig-Index	P&I Ref.	Item number	Description	Qty.	SAB193S	SAB193L	SAB233S	SAB233L	SAB233E	SAB283S	SAB283L
10-W	WCOC	990A0090H01EU	Oil cooler ANHP52-20H	1	X	X					
10-W	WCOC	990A0090H02EU	Oil cooler ANHP52-30H	1	X	X					
10-W	WCOC	990A0090H03EU	Oil cooler ANHP52-40H	1	X	X					
10-W	WCOC	990A0090H04EU	Oil cooler ANHP52-50H	1	X	X					
10-W	WCOC	990A0090H05EU	Oil cooler ANHP52-60H	1	X	X					
10-W	WCOC	990A0090H06EU	Oil cooler ANHP52-70H	1	X	X					
10-W	WCOC	990A0090H07EU	Oil cooler ANHP52-80H	1	X	X					
10-W	WCOC	990A0090H08EU	Oil cooler ANHP52-100H	1	X	X					
10- R/W	TSOC/WCOC	1952.119	Oil cooler PSHE 3HH 34 (E)	1	X	X	X	X	X	X	X
10- R/W	TSOC/WCOC	1952.120	Oil cooler PSHE 3HH 66 (E)	1	X	X	X	X	X	X	X
10- R/W	TSOC/WCOC	1952.121	Oil cooler PSHE 3HH 116 (E)	1	X	X	X	X	X	X	X
10- R/W	TSOC/WCOC	1952.122	Oil cooler PSHE 3HH 146 (E)	1			X	X	X	X	X
10- R/W	TSOC/WCOC	1952.123	Oil cooler PSHE 4HH 120 (F)	1					X	X	X
10- R/W	TSOC/WCOC	1952.124	Oil cooler PSHE 4HH 222 (F)	1					X	X	X
10-	P119	1361.206	Stop valve, straight, SVA -S40 (J)(G)	1	X	X					
10-01	P119	1361.207	Stop valve, straight. SVA-S50 (J)(E)	1	X	X	X	X	X	X	X
10-01	P119	1361.208	Stop valve, straight. SVA-S65 (J)(F)	1					X	X	X
10-02	STR-2, P144	950A0001H06EU	Strainer 2" RSF 60MESH DN incl 2" SW Flanges (L)(E)	1	X	X	X	X	X	X	X
10-02		950A0001H25	Service Kit for 2in strainer 2in flange (L)(V)(E)	1	X	X	X	X	X	X	X
10-02		950A0001H40	Screen Gasket 2" Strainer Flange (L)(E)	1	X	X	X	X	X	X	X
10-02		950A0001H34	Gasket 2" Strainer Flange (L)	2	X	X	X	X	X	X	X

Fig-Index	P&I Ref.	Item number	Description	Qty.	SAB193S	SAB193L	SAB233S	SAB233L	SAB233E	SAB283S	SAB283L
10-03	CV-2, P139	956A0012G10EU	Check valve, Str., 2" (L)(E)	1	X	X	X	X	X	X	X
10-03		959A0057H07	Gasket, Flange, size 2" (L)(E)	2	X	X	X	X	X	X	X
10-04		1344.369	Flange DN40 RF CL300 SCH40 ANSI B16.5 Welding neck, (L)	2	X	X	X	X	X		
10-04		1344.370	Flange DN 65 (L)	2						X	X
10-05		959A0054H25	Gasket 3 3/4 OD for 1 1/2" ASME Cl. 300 Flange (L)	2	X	X	X	X	X		
10-05		959A0054H27	Gasket 5 1/8 OD for 2 1/2" ASME Cl.300 flange (L)	2						X	X
10-06		901A0172H03EU	Kit, screws f. flange DN 40 (L)	2	X	X	X	X	X		
10-06		901A0172H05EU	Kit, screws f. flange DN 65 (L)	2						X	X
10-07	TCV-1, P120	2418.001	Oil Regulating Valve ORV 40 DIN H1 49C/120F	1	X	X					
10-07		1375.138	Valve Housing ORV 40 DIN H1 w. gasket and guide ring	1	X	X					
10-07		1375.157	Thermostatic element, H1, 49°C	1	X	X					
10-07		2418.1000	Complete valve ORV 40D H1, 60°C (G)	1	X	X					
10-07		1375.138	Valve housing ORV 40 DIN H1 w. gasket and guide ring (G)	1	X	X					
10-07		1375.1002	Thermostatic element H1, 60°C (G)	1	X	X					
10-07		2418.002	Oil Regulating Valve ORV 50 DIN H2 49C/120F (E)	1	X	X	X	X	X	X	
10-07		1375.139	Valve housing ORV 50 DIN H2 w. gasket and guide ring (E)	1	X	X	X	X	X	X	
10-07		1375.158	Thermostat H2 49C/120F (E)	1	X	X	X	X	X	X	
10-07		2418.1001	Complete valve ORV 50D H2, 60°C (E)	1	X	X	X	X	X	X	
10-07		1375.139	Valve housing ORV 50 DIN H2 w. gasket and guide ring (E)	1	X	X	X	X	X	X	
10-07		1375.1003	Thermostatic element H2, 60°C (E)	1	X	X	X	X	X	X	
10-07		2418.003	Oil Regulating Valve ORV 65 DIN H3 49C/120F (F)	1				X	X	X	X
10-07		1375.145	Valve housing ORV 65 DIN H3 w. gasket and guide ring (F)	1				X	X	X	X
10-07		1375.159	Thermostat H3 49C/120F (F)	1				X	X	X	X
10-07		2418.1002	Complete valve, ORV 65 H3, 60°C (F)	1				X	X	X	X
10-07		1375.145	Valve housing ORV 65 DIN H3 w. gasket and guide ring (F)	1				X	X	X	X
10-07		1375.1004	Termostat H3 60 degree celcius for ORV H3, (F)	1				X	X	X	X
10-07		148H3246	Gasket and guide ring ORV 25/40 H1 (G)	1	X	X					
10-07		148H3247	Gasket and guide ring ORV 40/50 H2 (E)	1	X	X	X	X	X	X	
10-07		148H3248	Gasket and guide ring ORV 65/80 H3 (F)	1				X	X	X	X
10-08		2356.144	Gasket Alu 40.5/33x1.5	1	X	X	X	X	X	X	X
J) Spare parts kits and sets for stop valve in fig.15.											
L) Only if with oil pump											
M) Only in combination with PSHE 136/188											
V) Consists of screen, spring and screen gasket											
E) DN 50 tube system											
F) DN 65 tube system											
G) DN 40 tube system											

1.14 Oil pump

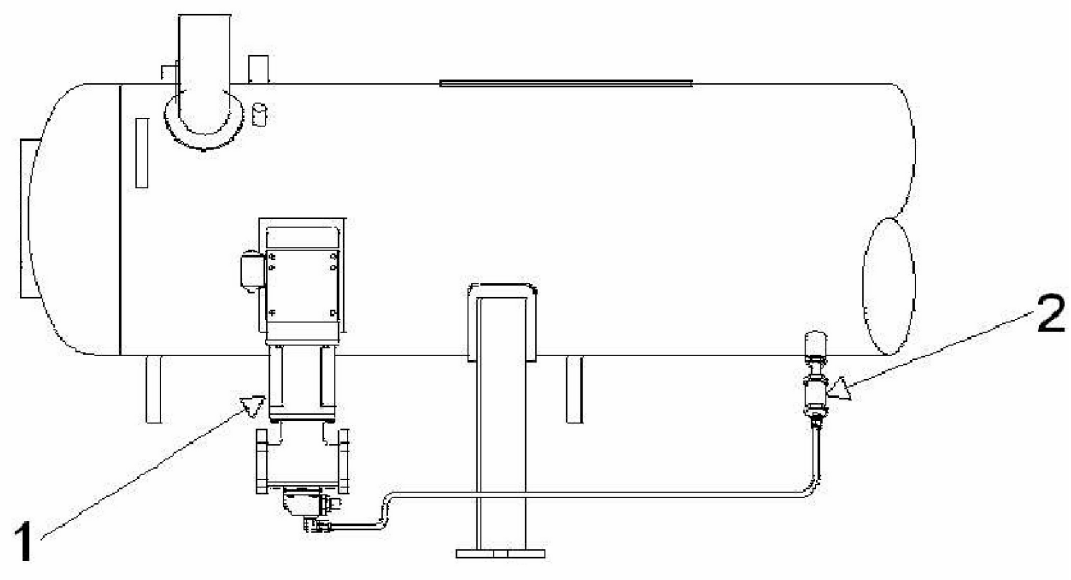

Fig. 11

Parts list Oil pump

Fig-Index	P&I Ref.	Item number	Description	Qty.	SAB193S	SAB193L	SAB233S	SAB233L	SAB233E	SAB283S	SAB283L
11-01	PM-1, P146	960A0082G01	Ass oil pump with motor, HJ495M 13/15GPM 145TC, 1HP, 3x380v-50Hz/460v-60Hz	1	X	X					
11-01	PM-1, P146	960A0082G03	Ass oil pump with motor, HJ495M 13GPM 145TC, 1HP, 3x415v50Hz	1	X	X					
11-01	PM-1, P146	960A0082G07	Ass oil pump with motor, HJ495M 23GPM 145TC, 1.5HP 1750RPM 3x460v-60Hz	1			X	X			
11-01	PM-1, P146	960A0082G10	Ass oil pump with motor, HJ495M 19GPM 145TC, 1.5HP, 3x415v50Hz	1			X	X			
11-01		960A0082H01	Oil Pump Viking HJ495M only (without motor) 23/19GPM-1750/1450RPM	1	X	X	X	X			
11-01		914A0015H18	Motor only 1hp - 145TC, 3x400/460V 50/60Hz	1	X	X					
11-01		914A0015H20	Motor only 1hp - 145TC, 3x415V 50Hz	1	X	X					
11-01		914A0015H02	Motor only 1 1/2hp - 145TC 3 x 400/460V 50/60Hz	1			X	X			
11-01		914A0015H07	Motor only 1 1/2hp - 145TC, 3x415V 50Hz	1			X	X			
11-01		960A0066H11	Coupling only for 1.0 & 1.5hp motor 145TC	1	X	X	X	X			
11-01	PM-1, P146	960A0082G04	Ass oil pump with motor, HL495M 27/33GPM 182TC, 3HP, 3x380v-50Hz/460v-60Hz	1					X		
11-01	PM-1, P146	960A0082G06	Ass oil pump with motor, HL495M 27GPM 182TC, 3HP, 3x415V-50Hz	1					X		
11-01		960A0082H02	Oil Pump Viking HL495M only (without motor) 33/27GPM-1750/1450RPM	1					X		
11-01		914A0015H03	Motor only 3hp-182TC 3 x 400/460V 50/60Hz	1					X		
11-01		914A0015H09	Motor only 3 hp -182TC, 3x415V 50Hz	1					X		
11-01		960A0066H12	Coupling only for 3.0hp Motor 182TC	1					X		

Fig-Index	P&I Ref.	Item number	Description	Qty.	SAB193S	SAB193L	SAB233S	SAB233L	SAB233E	SAB283S	SAB283L
11-01	PM-1, P146	960A0083G02	Ass oil pump with motor, AS495M 55GPM 184TC, 5HP, 3x460V-60Hz	1						X	X
11-01	PM-1, P146	960A0083G03	Ass oil pump with motor, AS495M 45GPM 184TC, 5HP, 3x415V-50Hzs	1						X	X
11-01		960A0083H01	Oil Pump Viking AS495M only (without motor) 55/45GPM-1750/1450RPM	1						X	X
11-01		914A0016H02	Motor only 5hp - 184TC, 3 x 400/460V 50/60Hz	1						X	X
11-01		914A0016H20	Motor only 5hp, 184TC, 3x415V 50Hz	1						X	X
11-01		960A0067H13	Coupling only for 184TC	1						X	X
11-01	PM-1, P146	960A0083G07	Ass., Oil pump, AL495M-254TC 7 1/2 hp 3x400/460V 50/60Hz	1							
11-01	PM-1, P146	960A0083G06	Ass. Oil pump AK495M 213TC, 7 1/2hp, 3x415V 50Hz	1							
11-01		960A0083H03	Oil Pump Viking AL495M only (without motor) 75/62GPM-1750/1450RPM	1							
11-01		914A0016H12	Motor 7.5Hp 50Hz 3x415V 1500rpm	1							
11-01		914A0016H05	Motor only 7 1/2hp, 254TC 3 x 400/460V 50/60Hz	1							
11-01		960A0083H02	Oil Pump Viking AK495M only (without motor) 72GPM-1450RPM	1							
11-01		960A0067H12	Coupling for 7.5 hp motor 254TC	1							
11-01		960A0067H11	Coupling only for 213TC	1							
11-01		535M0202G02	Seal Kit for Viking pump 1.0-3.0 hp type HJ-HL (N)	1	X	X	X	X	X		
11-01		535M0202G03	Shaft seal kit pump 5.0-7.5hp Type AS-AK-AL (N)	1						X	X
11-02	CV-3, P140	956A0014H01	Check Valve in-line 3/4	1	X	X	X	X			
11-02	CV-3, P140	956A0014H02	Check Valve Size 1”	1					X	X	X
			From delivery May 2019								
11-01	P/PM-1	1524.1095	Oil Pump Pos displace 1.10 kW 53.4/65 L/m 380/400/440V 50/60Hz w/Relief valve KF 40 RF 34/375-D15-turned	1	X	X					
11-01	P/PM-1	1524.1096	Oil Pump Pos displace 1.50 kW 82/100 L/m 380/400/440V 50/60Hz w/Relief valve KF 63 RF 34/375-D15-turned	1			X	X			
11-01	P/PM-1	1524.1097	Oil Pump Pos displace 2.20 kW 105/128 L/m 380/400/440V 50/60Hz w/Relief valve KF 80 RF 34/375-D15-turned	1					X		
11-01	P/PM-1	1524.1098	Oil Pump Pos displace 4.00 kW 209/252 L/m 380/400/440V 50/60Hz w/Relief valve KF 150 RF 34/375-D15-turned	1						X	X
11-01		1524.2063	Sparepart kit Oil Pump KF40/63/80 RF 34/375 - D 15	1	X	X	X	X	X		
11-01		1524.2064	Sparepart kit Oil Pump KF150 RF 34/375 - D 15	1						X	X
N) Consists of shaft seal, O-ring, bearings and locknut											

1.15 Coupling assembly

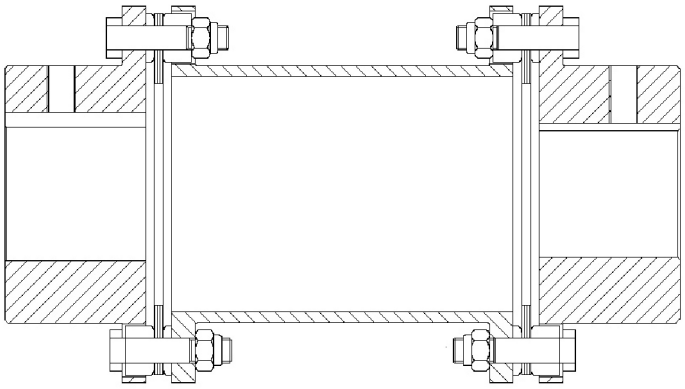

Fig. 12: Drawing for coupling

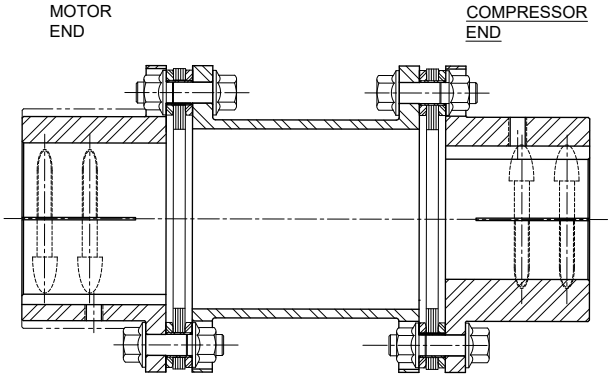

Coupling list

Fig-Index	Item Number Clamped design (T)	Item number Straight bore	Description	Qty.	SAB193S	SAB193L	SAB233S	SAB233L	SAB233E	SAB283S	SAB283L	SAB283E	SAB283X
			Ass. Coupling BPU-38										
12-	1524.1068	1524.274	BPU-38 Ass. Coupling Ø60 & 2.251" (G)	1	X	X							
12-	1524.1069	1524.275	BPU-38 Ass. Coupling Ø65 & 2.251" (G)	1	X	X							
12-	1524.1071	1524.281	BPU-38 Ass. Coupling Ø65 & 2.501" (G)	1			X	X	X				
12-	1524.1043	1524.276	BPU-38 Ass. Coupling Ø70 & 2.251" (G)	1	X	X							
12-	1524.1072	1524.282	BPU-38 Ass. Coupling Ø70 & 2.501" (G)	1			X	X	X				
			Ass. Coupling BPU-41										
12-	1524.1064	1524.498	BPU-41 Ass. Coupling Ø65 & 2.251" (G)	1	X	X							
12-	1524.1066	1524.500	BPU-41 Ass. Coupling Ø65 & 2.501" (G)	1			X	X	X				
12-	1524.1065	1524.499	BPU-41 Ass. Coupling Ø70 & 2.251" (G)	1	X	X							
12-	1524.1067	1524.501	BPU-41 Ass. Coupling Ø70 & 2.501" (G)	1			X	X	X				
12-	1524.1058	1524.286	BPU-41 Ass. Coupling Ø75 & 2.251" (G)	1	X	X							
12-	1524.1059	1524.287	BPU-41 Ass. Coupling Ø75 & 2.501" (G)	1			X	X	X				
12-		1524.1020	BPU-41 Ass. Coupling Ø75 & 2.501" (XL) (G)	1			X	X	X				

Fig-Index	Item Number Clamped design (T)	Item number Straight bore	Description	Qty.	SAB193S	SAB193L	SAB233S	SAB233L	SAB233E	SAB283S	SAB283L	SAB283E	SAB283X
12-	1524.1053	1524.315	BPU-41 Ass. Coupling Ø75 & 2.501" (K) (G)	1			X	X	X				
12-	1524.1055	1524.283	BPU-41 Ass. Coupling Ø80 & 2.251" (G)	1	X	X							
12-	1524.1049	1524.311	BPU-41 Ass. Coupling Ø80 & 2.251" (G) (K)	1	X	X							
12-	1524.1056	1524.284	BPU-41 Ass. Coupling Ø80 & 2.501" (G)	1			X	X	X				
12-	1524.1044	1524.312	BPU-41 Ass. Coupling Ø80 & 2.501" (G) (K)	1			X	X	X				
			Ass. Coupling BPU-47										
12-	1524.1083	1524.531	BPU-47 Ass. Coupling Ø62 & 3.251" (G)	1						X	X	X	X
12-		1524.1010	BPU-47 Ass. Coupling Ø65 & 3.251" (G) (L)	1						X	X	X	X
12-	1524.1076	1524.1016	BPU-47 Ass. Coupling Ø70 & 3.251" (G)	1						X	X	X	X
12-		1524.1011	BPU-47 Ass. Coupling Ø70 & 3.251" (G) (L)	1						X	X	X	X
12-		1524.1028	BPU-47 Ass. Coupling Ø75 & 3.251" (G)	1						X	X	X	X
12-		1524.1012	BPU-47 Ass. Coupling Ø80 & 3.251" (L) (G)	1						X	X	X	X
12-	1524.1074	1524.1013	BPU-47 Ass. Coupling Ø80 & 3.251" (K) (G)	1						X	X	X	X
12-	1524.1075	1524.1014	BPU-47 Ass. Coupling Ø80 & 3.251" (G)	1						X	X	X	X
12-	1524.1077	1524.1018	BPU-47 Ass. Coupling Ø85 & 2.501" (K) (G)	1			X	X	X				
12-		1524.1019	BPU-47 Ass. Coupling Ø85 & 2.501" (SL) (G)	1			X	X	X				
			Ass. Coupling BPU-54										
12-	1524.1079	1524.459	BPU-54 Ass. Coupling Ø80 & 3.251"(G)	1						X	X	X	X
12-	1524.1084	1524.532	BPU-54 Ass. Coupling Ø80 & 3.51" (K) (G)	1						X	X	X	X
12-	1524.1082	1524.475	BPU-54 Ass. Coupling Ø85 & 2.501"(G)	1			X	X	X				
12-	1524.1085	1524.533	BPU-54 Ass. Coupling Ø85 & 3.251"(G)	1						X	X	X	X
12-		1524.1002	BPU-54 Ass. Coupling Ø90 & 2.501" (K) (G)	1			X	X	X				
12-	1524.1078	1524.458	BPU-54 Ass. Coupling Ø90 & 3.251"(G)	1						X	X	X	X
12-		1524.506	BPU-54 Ass. Coupling Ø90 & 3.251" (K) (G)	1						X	X	X	X
12-	1524.1080	1524.460	BPU-54 Ass. Coupling Ø95 & 3.251"(G)	1						X	X	X	X
12-		1524.534	BPU-54 Ass. Coupling Ø100 & 2.501" (K) (G)	1			X	X	X				
12-	1524.1081	1524.464	BPU-54 Ass. Coupling Ø100 & 3.251"(G)	1						X	X	X	X
			Compressor hub										
12-		2125.2005	BPU-38 Compressor hub Ø2.251"	1	X	X							
12-	2125.2072	2125.2006	BPU-38 Compressor hub Ø2.501"	1			X	X	X				
12-		2125.2011	BPU-41 Compressor hub Ø2.251"	1	X	X							
12-		2125.2012	BPU-41 Compressor hub Ø2.501"	1			X	X	X				
12-		2125.2021	BPU-47 Compressor hub Ø2.501"	1			X	X	X				
12-		2125.2022	BPU-47 Compressor hub Ø3.251"	1						X	X	X	X
12-		2125.2032	BPU-54 Compressor hub Ø2.501"	1			X	X	X				
12-		2125.2033	BPU-54 Compressor hub Ø3.251	1						X	X	X	X

Fig-Index	Item Number Clamped design (T)	Item number Straight bore	Description	Qty.	SAB193S	SAB193L	SAB233S	SAB233L	SAB233E	SAB283S	SAB283L	SAB283E	SAB283X
			Intermediate Part										
12-	2125.2010	2125.2010	BPU-38 Intermediate Part 7,00"	1	X	X							
12-	2125.2019	2125.2019	BPU-41 Intermediate Part 7,00"	1			X	X	X				
12-	2125.2018	2125.2018	BPU-41 Intermediate Part 5.819" (K)	1			X	X	X				
12-	2125.2020	2125.2020	BPU-41 Intermediate Part 9.370" (XL)	1			X	X	X				
12-	2125.2029	2125.2029	BPU-47 Intermediate Part 7.00"	1						X	X	X	X
12-	2125.2028	2125.2028	BPU-47 Intermediate Part 5.819" (K)	1			X	X	X	X	X	X	X
12-	2125.2030	2125.2030	BPU-47 Intermediate Part 8.181" (L)	1						X	X	X	X
12-	2125.2031	2125.2031	BPU-47 Intermediate Part 8.386" (LL)	1			X	X	X				
			Motor hub										
09-		2125.2007	BPU-38 Motor hub Ø60	1	X	X							
09-		2125.2008	BPU-38 Motor hub Ø65	1	X	X	X	X	X				
09-	2125.2073	2125.2009	BPU-38 Motor hub Ø70	1	X	X	X	X	X				
09-		2125.2014	BPU-41 Motor hub Ø65	1	X	X	X	X	X				
12-		2125.2015	BPU-41 Motor hub Ø70	1	X	X	X	X	X				
12-		2125.2016	BPU-41 Motor hub Ø75	1	X	X	X	X	X				
12-		2125.2017	BPU-41 Motor hub Ø80	1	X	X	X	X	X				
12-		2125.2023	BPU-47 Motor hub Ø65	1						X	X	X	X
12-		2125.2024	BPU-47 Motor hub Ø70	1						X	X	X	X
12-		2125.2025	BPU-47 Motor hub Ø75	1						X	X	X	X
12-		2125.2026	BPU-47 Motor hub Ø80	1						X	X	X	X
12-		2125.2027	BPU-47 Motor hub Ø85	1			X	X	X				
12-		2125.2034	BPU-54 Motor hub Ø80	1						X	X	X	X
12-		2125.2035	BPU-54 Motor hub Ø85	1			X	X	X	X	X	X	X
12-		2125.2036	BPU-54 Motor hub Ø90	1			X	X	X	X	X	X	X
12-		2125.2037	BPU-54 Motor hub Ø95	1						X	X	X	X
12-		2125.2038	BPU-54 Motor hub Ø100	1			X	X	X	X	X	X	X
			Kit Disc pack										
12-01		720C0078-H11	Kit Disc pack BPU-38 Incl. all fasteners	2	X	X	X	X	X				
12-02		720C0079-H11	Kit Disc pack BPU-41 Incl. all fasteners	2	X	X	X	X	X	X	X	X	X
12-03		1524.2035	Kit Disc pack BPU-47 Incl. all fasteners	2			X	X	X	X	X	X	X
12-04		720C0086-H11	Kit Disc pack BPU-54 Incl. all fasteners	2			X	X	X	X	X	X	X

(G) Motor and compressor bore respectively

(K) Coupling spacer short L=148 (5.819")

(L) Coupling spacer long L=208 (8.181")

(LL) Coupling long plus L=213 (8.386")

(SL) Special long L=213 (8.386")

(XL) Extra long L=238 (9.370")

(T) Introduced app. mid. 2019 to replace straight bore

1.16 Alignment tool for coupling

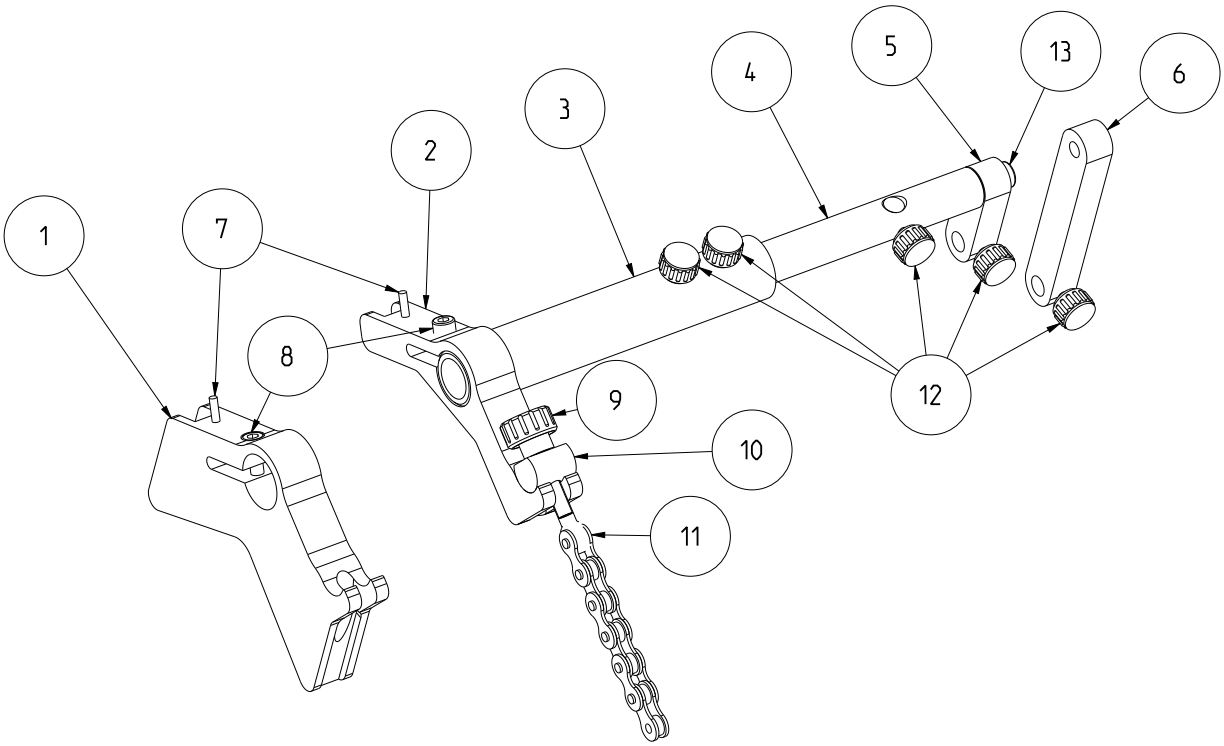

Pos. no.	Designation	Part no.		CMO	HPO	SMC	HPC	HPX	SAB	SAB Flex
	Alignment tool for coupling	**3183.162**	1							
1	Mounting block high for 3183.162	3183.168		X	X	X	X	X	X	X
2	Mounting block low for 3183.162	3183.167		X	X	X	X	X	X	X
3	Guide for holder L=140 mm	3183.166		X	X	X	X	X	X	X
4	Cantilever arm Ø16x180mm	3183.163		X	X	X	X	X	X	X
5	Arm for dial gauge short	3183.169		X	X	X	X	X	X	X
6	Arm for dial gauge long	3183.170		X	X	X	X	X	X	X
7	Pin dowel 3x20mm ISO 8734A/ DIN 6325 hardened	1446.052		X	X	X	X	X	X	X
8	Socket Head Cap Screw M5x20	1413.332		X	X	X	X	X	X	X
9	Knurled nut DIN 466 - M6	1435.003		X	X	X	X	X	X	X
10	Crossbar for dial gauge holder	3183.164		X	X	X	X	X	X	X
11	Chain with chain tightener for 3183.162	3183.165		X	X	X	X	X	X	X
12	Knurled grip knob M4x6	1435.004		X	X	X	X	X	X	X
13	Socket Head Cap Screw M6x16 12.9	1413.340		X	X	X	X	X	X	X
	Dial Gauge 1044SB	1622.004		X	X	X	X	X	X	X
	Extension rod 10mm	1622.005		X	X	X	X	X	X	X
	Extension rod 25mm	1622.006		X	X	X	X	X	X	X

1.17 Liquid injection

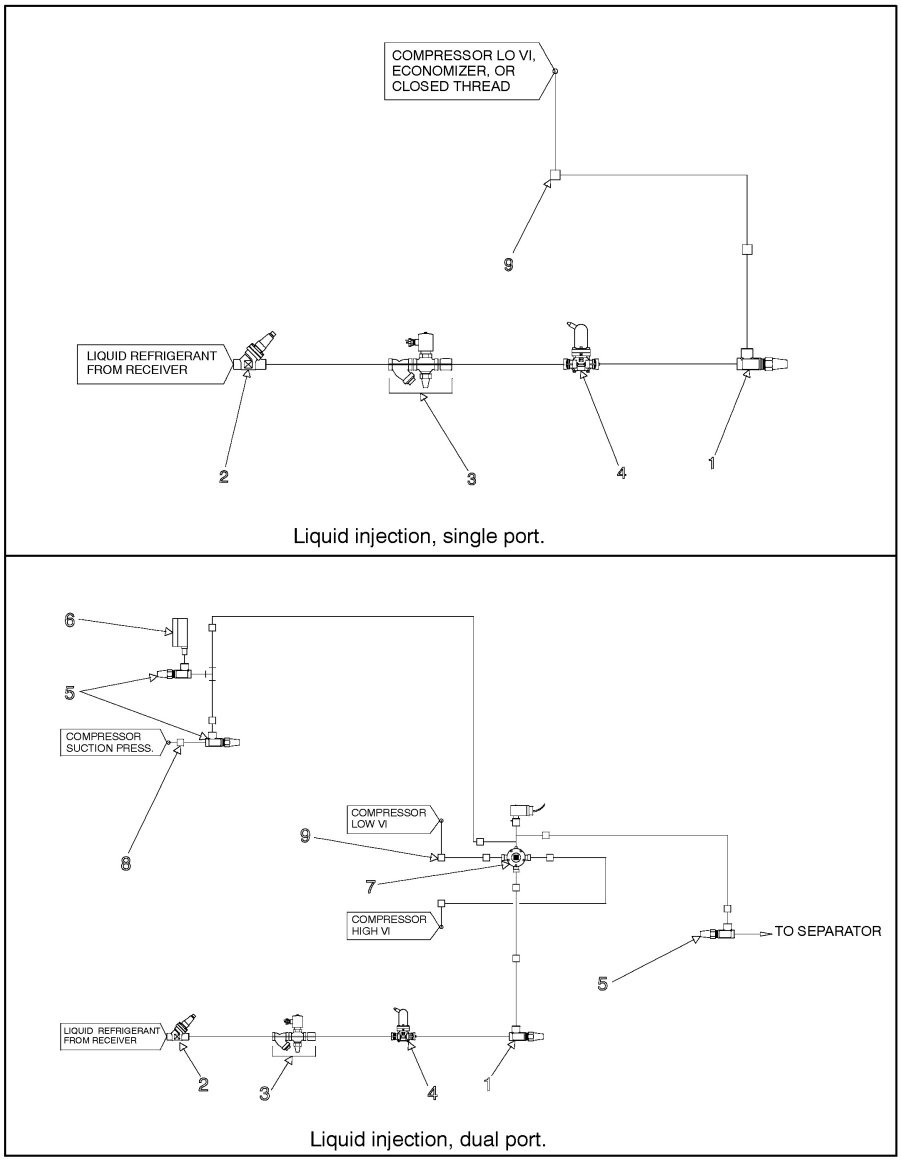

Fig. 13

Liquid injection

Fig-Index	P&I Ref.	Item number	Description	Qty.	SAB193S	SAB193L	SAB233S	SAB233L	SAB233E	SAB283S	SAB283L
13-01	P170	1361.189	Stop valve, Ang., Sc., SVA-S 20 (J)(q)(t)	1	X	X	X	X	X	X	X
13-01	P170	1361.190	Stop valve, Ang., Sc., SVA-S 25 (J)(r)(t)	1	X	X	X	X	X	X	X
13-01	P170	1361.191	Stop valve, Ang., Sc., SVA-S 32 (J)(s)(t)	1	X	X	X	X	X	X	X
13-01	P170	1361.203	Stop valve, Str., Sc., SVA-S 20 (J)(q)(u)	1	X	X	X	X	X	X	X
13-01	P170	1361.204	Stop valve, Str., Sc., SVA-S 25 (J)(r)(u)	1	X	X	X	X	X	X	X
13-01	P170	1361.205	Stop valve, Str., Sc., SVA-S 32 (J)(r)(u)	1	X	X	X	X	X	X	X
13-02	P165	1361.202	Stop valve, Str., Sc., SVA-S 15 (J) (p)	1	X	X	X	X	X	X	X
13-02	P165	1361.203	Stop valve, Str., Sc., SVA-S 20 (J) (q)	1	X	X	X	X	X	X	X
13-02	P165	1361.204	Stop valve, Str., Sc., SVA-S 25 (J) (r)	1	X	X	X	X	X	X	X

Fig-Index	P&I Ref.	Item number	Description	Qty.	SAB193S	SAB193L	SAB233S	SAB233L	SAB233E	SAB283S	SAB283L
13-02	P165	1361.206	Stop valve, Str., Sc., SVA-S 40 (J) (s)	1	X	X	X	X	X	X	X
13-03		1377.262	Gasket (set of 2), ring ø32/22 x 1,0 (p)	2	X	X	X	X	X	X	X
13-03		1336.029	Gasket (set of 2), ring ø39/29 x 1,5 (r)	2	X	X	X	X	X	X	X
13-03	P167	1372.395	Solenoid valve EVRAT 10 (excl. coil) (o)	1	X	X	X	X	X	X	X
13-03	P167	1372.347	Solenoid valve EVRA 15 (excl. coil) (p)	1	X	X	X	X	X	X	X
13-03	P167	1372.348	Solenoid valve EVRA 20 (excl. coil) (q)	1	X	X	X	X	X	X	X
13-03	P167	1372.349	Solenoid valve EVRA 25 (excl. coil) (r)	1	X	X	X	X	X	X	X
13-03	P167	1372.039	Solenoid valve EVRA 32 (excl. coil) (s)	1	X	X	X	X	X	X	X
13-03	P167	1372.538	Coil 10W 110V 50/60Hz	1	X	X	X	X	X	X	X
13-03	P167	1372.537	Coil 10W 220/230V 50/60Hz	1	X	X	X	X	X	X	X
13-03	P166	1375.174	Strainer FA15 (p)	1	X	X	X	X	X	X	X
13-03		1377.250	Repair kit (strainer and gasket), FA15	1	X	X	X	X	X	X	X
13-03		1377.078	Seal kit (f. cover and flange), FA15	1	X	X	X	X	X	X	X
13-03	P166	1375.173	Strainer, Str., FA 20 (q)	1	X	X	X	X	X	X	X
13-03		1377.251	Repair kit (strainer and gasket), FA 20	1	X	X	X	X	X	X	X
13-03		1377.079	Gasket set(f. cover and flange), FA 20	1	X	X	X	X	X	X	X
13-03	P166	1375.186	Strainer (body), Str., FIA 25 D (r)	1	X	X	X	X	X	X	X
13-03	P166	1375.190	Strainer (body), Str., FIA 40 D (s)	1	X	X	X	X	X	X	X
13-03	P166	1375.082	Filter element 100Mic for FIA 25-40	1	X	X	X	X	X	X	X
13-03	P168	1377.263	Sight glass SGT 15 TG (p)	1	X	X	X	X	X	X	X
13-03	P168	1377.268	Sight glass SGT 24 TG (r)	1	X	X	X	X	X	X	X
13-03	P168	2511.022	Sight glass MLI 40 D (s)	1	X	X	X	X	X	X	X
13-04	P169	1379.064	Actuator ICAD 600 for motorvalve	1	X	X	X	X	X	X	X
13-04	P169	954A0070H01EU	Motor valve ICM 20-A (excluding actuator)	1	X	X	X	X	X	X	X
13-04	P169	954A0070H02EU	Motor valve ICM 20-B (excluding actuator)	1	X	X	X	X	X	X	X
13-04	P169	954A0070H03EU	Motor valve ICM 20-C (excluding actuator)	1	X	X	X	X	X	X	X
13-04	P169	954A0071H01EU	Motor valve ICM 25-A (excluding actuator)	1	X	X	X	X	X	X	X
13-04	P169	954A0072H01EU	Motor valve ICM 32-A (excluding actuator)	1	X	X	X	X	X	X	X
13-04		1377.447	Spare parts kit, gaskets/O-rings f. ICM 20	1	X	X	X	X	X	X	X
13-04		1377.448	Spare parts kit, gaskets/O-rings f. ICM 25	1	X	X	X	X	X	X	X
13-04		1377.449	Spare parts kit, gaskets/O-rings f. ICM 32	1	X	X	X	X	X	X	X
13-04		1377.453	Multi-function tool ICM20-32	1	X	X	X	X	X	X	X
13-05		SPEC	Application-specific or customized (j)	3	X	X	X	X	X	X	X
13-06		SPEC	Application-specific or customized (j)	1	X	X	X	X	X	X	X
13-07	P171	951A0053H01	Solenoid valve 3-way PE (excluding coil)	1	X	X	X	X	X	X	X
13-07	P171	951A0095H01	Coil 11W 120V 50/60Hz	1	X	X	X	X	X	X	X
13-07	P171	951A0095H02	Coil 11W 240V 50/60Hz	1	X	X	X	X	X	X	X
13-08		SPEC	Application-specific or customized (j)	1	X	X	X	X	X	X	X
13-09		SPEC	Application-specific or customized (j)	1	X	X	X	X	X	X	X

J) Spare parts kits and sets for stop valve in fig.9

j) Contact Refrigeration Parts Centre for more information

o) If liquid injection flow max. 8.6 kg/min

p) If liquid injection flow max. 15.6 kg/min

q) If liquid injection flow max. 25.9 kg/min

r) If liquid injection flow max. 57.6 kg/min

s) If liquid injection flow max. 227 kg/min

t) If liquid injection, single flow

u) If liquid injection, dual flow

1.18 Economizer

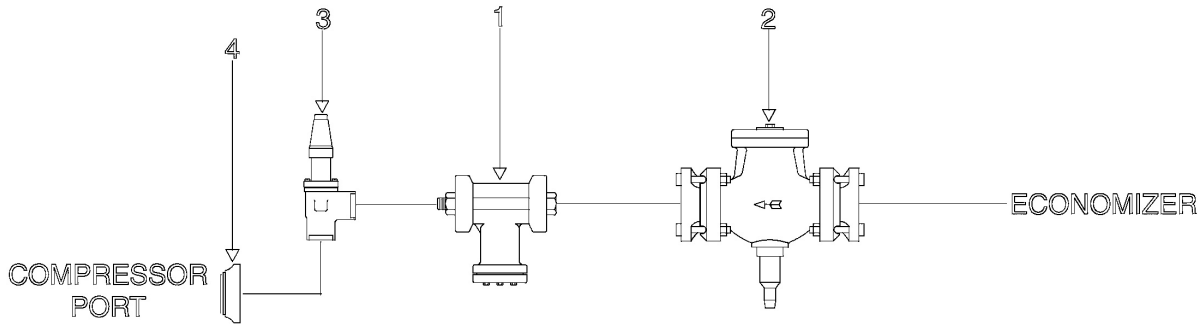

Fig. 14

Economizer

Fig-Index	P&I Ref.	Item number	Description	Qty.	SAB193S	SAB193L	SAB233S	SAB233L	SAB233E	SAB283S	SAB283L
14-		535M0001G03EU	Kit, Economizer connection system	1	X	X					
14-		535M0001G04EU	Kit, Economizer connection system	1			X	X	X		
14-		535M0001G06EU	Kit, Economizer connection system	1						X	X
14-		535M0001G07EU	Kit, Economizer connection system	1							
14-01	STR-5, P142	950A0001H08EU	Strainer 2", flange size 1-1/2"	1	X	X					
14-01	STR-5, P142	950A0001H06EU	Strainer 2", flange size 2"	1			X	X	X	X	X
14-01	STR-5, P142	950A0001H09EU	Strainer 3", flange size 3"	1							
14-01		950A0001H27	Kit for 2" strainer (V)	1	X	X					
14-01		950A0001H25	Kit for 2" strainer (V)	1			X	X	X	X	X
14-01		950A0001H28	Kit for 3" strainer (V)	1							
14-01		950A0001H40	Screen gasket f. 1-1/2" & 2" strainer	1	X	X	X	X	X	X	X
14-01		950A0001H41	Screen gasket f. 2-1/2" & 3" strainer	1							
14-01		950A0001H34	Flange gasket f. 1-1/2" & 2" strainer	2	X	X	X	X	X	X	X
14-01		950A0001H35	Flange gasket f. 2-1/2" & 3" strainer	2							
14-02	CV-3, P143	956A0025H23EU	Check valve, Str., 1-1/2", modified	1	X	X					
14-02	CV-3, P143	956A0025H24EU	Check valve, Str., 2", modified	1			X	X	X	X	X
14-02	CV-3, P143	956A0025H25EU	Check valve, Str., 3", modified	1							
14-03	P141	1361.192	Stop valve, Ang., Sc., SVA-S 40 (J)	1	X	X					
14-03	P141	1361.193	Stop valve, Ang., Sc., SVA-S 50 (J)	1			X	X	X	X	X
14-03	P141	1361.194	Stop valve, Ang., Sc., SVA-S 65 (J)	1							
14-04		944A0358H02EU	Flange square DN401-1/2"	1	X	X					
14-04		944A0358H03EU	Flange square DN50 2"	1			X	X	X		
14-04		3013.386	Flange, Square, DN 65	1						X	X
14-04		959A0057H05	Gasket OD=2-3/4"	1	X	X					
14-04		959A0057H07	Gasket OD=3-1/4"	1			X	X	X		
14-04		2356.202	Gasket flat 95/71x1.5	1						X	X
14-04		1356.030	Reducer DN 65/DN 50	1						X	X
14-04		1356.031	Reducer DN 80/DN 65	1							
J) Spare parts kits and sets for stop valve in fig.15.											
V) Consists of screen, spring and screen gasket											

1.19 Suction/discharge/service/stop valve

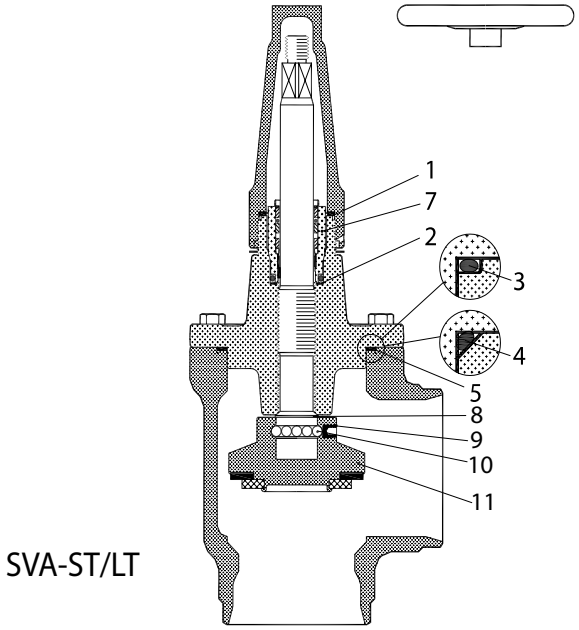

Fig. 15

Suction/discharge/service/stop valve

Fig - Index	Item number	Description	Qty.	Overhaul kit SVA-S/L, -ST/LT, -HS	Repair kit SVA-S/L, -ST/LT, -HS, SCA	Inspection kit SVA-S/L, -ST/LT, -HS, REG, FIA, CHV
17-	-	Suction/discharge/service stop valve (Contents of kits)	1	X	X	X
17-01	-	Packing washer for cap	(k)	X	X	X
17-02	-	Alu gasket for gland	(k)	X	X	X
17-03	-	O-ring (Top A)	(k)	X	X	X
17-04	-	O-ring (Top B)	(k)	X	X	X
17-05	-	Gasket (Top C)	(k)	X	X	X
17-06	-	O-ring for cone (SCA, CHV)	(k)		X	X
17-07	-	Packing Gland	(k)	X	X	
17-08	-	Soft back seat (SVA-ST80 and bigger)	(k)	X	X	
17-09	-	Set screter				
17-10	-	Ball	(k)	X		
17-11	-	Cone with seal	(k)	X		
k) Quantity as required for one valve in the actual kit						

1.20 Spare parts list for all suction/discharge/service/stop valves

Item Number		Description	Overhaul Kit (a)	Repair Kit (b)	Inspec-tion, Kit (c)	Cap Kit (c)
SVA-S (52bar)	SVA-ST (40bar)	Stop valve, Type and size				
1364.531	1364.325	Reg. valve, Ang., Sc., REG 40 #10	2453.044	1377.249	N/A	1365.098
	1361.117	Stop valve, Ang., Sc., SNV-ST CD10	(e)	(e)		(e)
1361.188	1361.052	Stop valve, Ang., Sc., SVA 15	1377.2011	1377.2007	1377.2010	1365.096
1361.202	1361.078	Stop valve, Str., Sc., SVA 15	1377.2011	1377.2007	1377.2010	1365.096
1361.189	1361.053	Stop valve, Ang., Sc., SVA 20	1377.2011	1377.2007	1377.2010	1365.097
1361.203	1361.079	Stop valve, Str., Sc., SVA 20	1377.2011	1377.2007	1377.2010	1365.097
1361.190	1361.054	Stop valve, Ang., Sc., SVA 25	1377.418	1377.2008	1377.2012	1365.098
1361.204	1361.067	Stop valve, Str., Sc., SVA 25	1377.418	1377.2008	1377.2012	1365.098
1361.191	1361.055	Stop valve, Ang., Sc., SVA 32	1377.418	1377.2008	1377.2012	1365.098
1361.205	1361.064	Stop valve, Str., Sc., SVA 32	1377.418	1377.2008	1377.2012	1365.098
1361.192	1361.056	Stop valve, Ang., Sc., SVA 40	1377.418	1377.2008	1377.2012	1365.098
1361.206	1361.065	Stop valve, Str., Sc., SVA 40	1377.418	1377.2008	1377.2012	1365.098
1361.193	1361.057	Stop valve, Ang., Sc., SVA 50	1377.419	1377.2013	1377.472	1365.098
1361.207	1361.066	Stop valve, Str., Sc., SVA 50	1377.419	1377.2013	1377.472	1365.098
1361.194	1361.063	Stop valve, Ang., Sc., SVA 65	1377.420	1377.2014	1377.466	1365.098
1361.208	1361.068	Stop valve, Str., Sc., SVA 65	1377.420	1377.2014	1377.466	1365.098
1361.195	1361.073	Stop valve, Ang., Sc., SVA 80	1377.421	1377.2015	1377.473	1365.099
1361.196	1361.074	Stop valve, Ang., Sc., SVA 100	1377.422	1377.483	1377.467	1365.099
1361.197	1361.075	Stop valve, Ang., Sc., SVA 125	1377.2004	1377.2005	1377.2013	1365.100
1361.198	1361.076	Stop valve, Ang., Sc., SVA 150	1377.2018	1377.2017	1377.2021	1365.100
1361.199	1361.077	Stop valve, Ang., Sc., SVA 200	1377.2020	1377.283	1377.2019	1365.101
N/A	1361.108	Stop valve, Ang., Sc., SVA-DH 250	N/A	1377.285	N/A	1365.115
N/A	1361.135	Stop valve, Ang., Sc., SVA-DH 300	N/A	1377.286	N/A	1365.115

a) Consists of: Cone complete including screw and steel balls, packing gland including gaskets and all other necessary gaskets (See liste 09).

b) Consists of packing gland including gaskets and all other necessary gasket, see liste 09.

c) Consists of all necessary gasket, see list 09.

d) Consists of cap with gasket (Index 10/11).

e) No spare parts available (tighten packing gland or replace all with a new valve).

1.21 Discharge stop/check valve

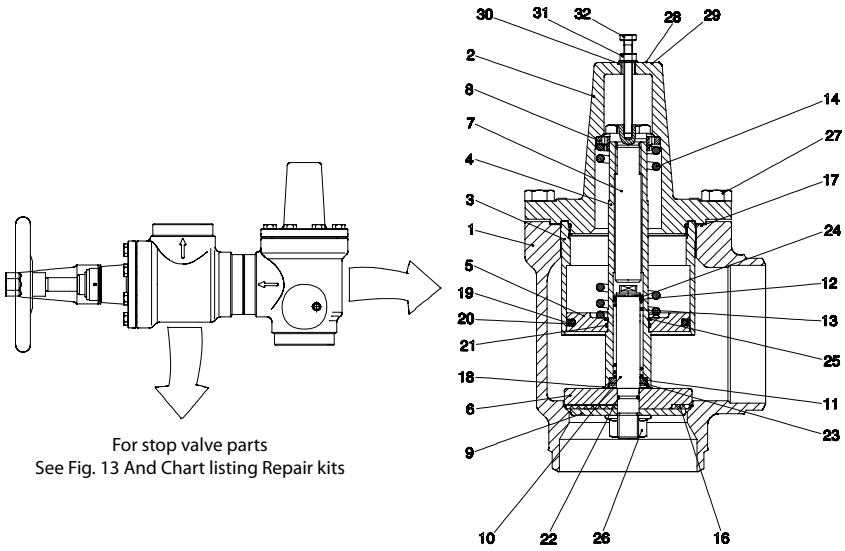

Fig. 16

Spare parts list for stop/check valve

Item number		Description	Bonnet gasket kit	Seal kit (e)	Spring kit 0.5 bar (f)	Spring kit 2 bar (f)
Type GVD	Type KDC					
1372.574	1372.601	Check valve, Ang.,KDC/ GVD 80 (T)	1365.2018	1365.2012	N/A	956A0044H14
1372.589	1372.602	Check valve, Ang.,KDC/ GVD 100 (T)	1365.2019	1365.2013	N/A	956A0045H14
1372.591	1372.603	Check valve, Ang., KDC/ GVD125 (T)	1365.2020	1365.2016	N/A	956A0046H14
1372.593	1372.604	Check valve, Ang., KDC/ GVD150 (T)	1365.2021	1365.2017	N/A	956A0047H14
1372.595	1372.605	Check valve, Ang., KDC/ GVD200 (T)	1356.2022	1365.2014	N/A	956A0048H14
1372.573	1372.606	Check valve, Ang.,KDC/ GVD 80 (U)	1365.2018	1365.2012	956A0044H15	N/A
1372.575	1372.607	Check valve, Ang., KDC/ GVD100 (U)	1356.2019	1365.2013	956A0045H15	N/A
1372.577	1372.608	Check valve, Ang., KDC/ GVD125 (U)	1356.2020	1365.2016	956A0046H15	N/A
1372.579	1372.609	Check valve, Ang., KDC/ GVD150 (U)	1356.2021	1365.2017	956A0047H15	N/A
1372.581	1372.610	Check valve, Ang., KDC/ GVD200 (U)	1356.2022	1365.2014	956A0048H15	N/A
T) Only at high stage operating mode						
U) Only at booster operating mode						
e) Consists of gasket and various rings (Index 16-22)						
f) Consists of plate, rivet and spring (Index 14/28-29)						

Discharge stop/check valve

Fig - Index	Item number	Description	Qty.	Bonnet gasket kit	Seal kit	Spring kit 0.5bar	Spring kit 2.0bar
16-	-	Assembly, Discharge stop/ check valve Contents of kits	1	X	X	X	X
16-01	-	Housing					
16-02	-	Bonnet					
16-03	-	Piston cylinder					
16-04	-	Piston rod					
16-05	-	Piston					
16-06	-	Cone					
16-07	-	Spring screw					
16-08	-	Spring bushing					
16-09	-	Cone plate					
16-10	-	Cone rod					
16-11	-	Rear bushing					
16-12	-	Front bushing					
16-13	-	Spring					
16-14	-	Spring (f)	1			X	X
16-15	-	Plug (not shown)					
16-16	-	Teflon ring (e)	1		X		
16-17	-	Bonnet gasket (e)	1	X	X		
16-18	-	Nylon washer (e)	1		X		
16-19	-	Glyde ring (e)	1		X		
16-20	-	O-ring (e)	1		X		
16-21	-	O-ring (e)	1		X		
16-22	-	O-ring (e)	1		X		
16-23	-	Spring ring					
16-24	-	Spring ring					
16-25	-	Spring ring					
16-26	-	Nut					
16-27	-	Set screw (O)					
16-28	-	Marking plate (f)	1			X	X
16-29	-	Rivet (f)	1			X	X
16-30	-	Washer					
16-31	-	Nut					
16-32	-	Screw					
J) Spare parts kits and sets for stop valve in .							
O) Quantity as required (may be suggested)							
e) Consists of gasket and various rings (Index 16-22)							
f) Consists of plate, rivet and spring (Index 14/28-29)							

1.22 Piping and instrumentation, typical

Pos. no.	Designation	In-operation position
101	Suction stop valve	Open
102	Stop valve after oil separator	Open
103	Change over valve	Open to safety valve, no. 1 or no. 2
104/PSV1	Safety relief valve	(Closed) Fixed set point
105/PSV1	Safety relief valve	(Closed) Fixed set point
106	Service valve for oil drainage	Closed
107	Purge valve	Closed
108	Service valve	"Pump out"/Closed
114	Stop valve, suction check valve by-pass	Open
115	Check valve	
116	Oil level indicators	
117	Oil level indicators	
119	Stop valve after oil separator	Open
120	Oil temperature regulating valve	Fixed set point
121	Service valve, oil filter	Closed
123	Stop valve before oil filter, Oil filter 1	Open when filter is in use
124	Regulating valve (oil flow)	Open (partly) Adjusted according to manual
126	Cold-start discharge valve	Opens automatically
127	Compressor protection valve	(Closed) Controlled by pilot valve
128	Pilot valve for pos. 127	(Closed) Fixed set point
129	Suction check valve	
130	Change over valve	
131	Safety valve oil cooler	
132	Safety valve oil cooler	
133	Safety valve oil cooler	
135	Stop valve before oil filter, Oil filter 1	Open when filter is in use
136	Stop valve before oil filter, Oil filter 2	Open when filter is in use
138	Stop valve before oil filter, Oil filter 2	Open when filter is in use
137	Service valve - oil filter	(Closed)
139	Non-return valve (check valve)	
140	Check valve	
	Economiser kit (optional)	
141	Stop valve	
142	Strainer	
142A	Damper with strainer	
143	Check valve	
144	Strainer before oil pump	
145	Service valve	Closed
146	Oil pump overflow valve	Closed. Fixed set point
151	Suction gas temperature	
152	Discharge gas temperature	
153	Lubricating oil temperature	
154	Separator oil temperature	
155	Oil pressure after filter	

Pos. no.	Designation	In-operation position
156	Oil pressure before filter	
157	Discharge pressure	
158	Suction pressure	
159	Pressure switch control	
160	Low level shutdown	
161	Heater	
163	High level indicator	
	Liquid injection - optional	
165	Liquid stop valve	Open
170	Stop valve	Open
172	Stop valve	Open
173	Stop valve	Open
175	Stop valve	Closed
181	Slide valve - unload	
182	Slide valve - load	
183	Moveable slide stop	
184	Moveable slide stop	
191	Compressor	
192	Electric motor	
193	Oil separator	
194	Oil cooler	
195	Oil filter	
196	Oil filter	
200	Stop valves - oil return	Open
200	Automatic oil return	

Table 1: Positions during operation

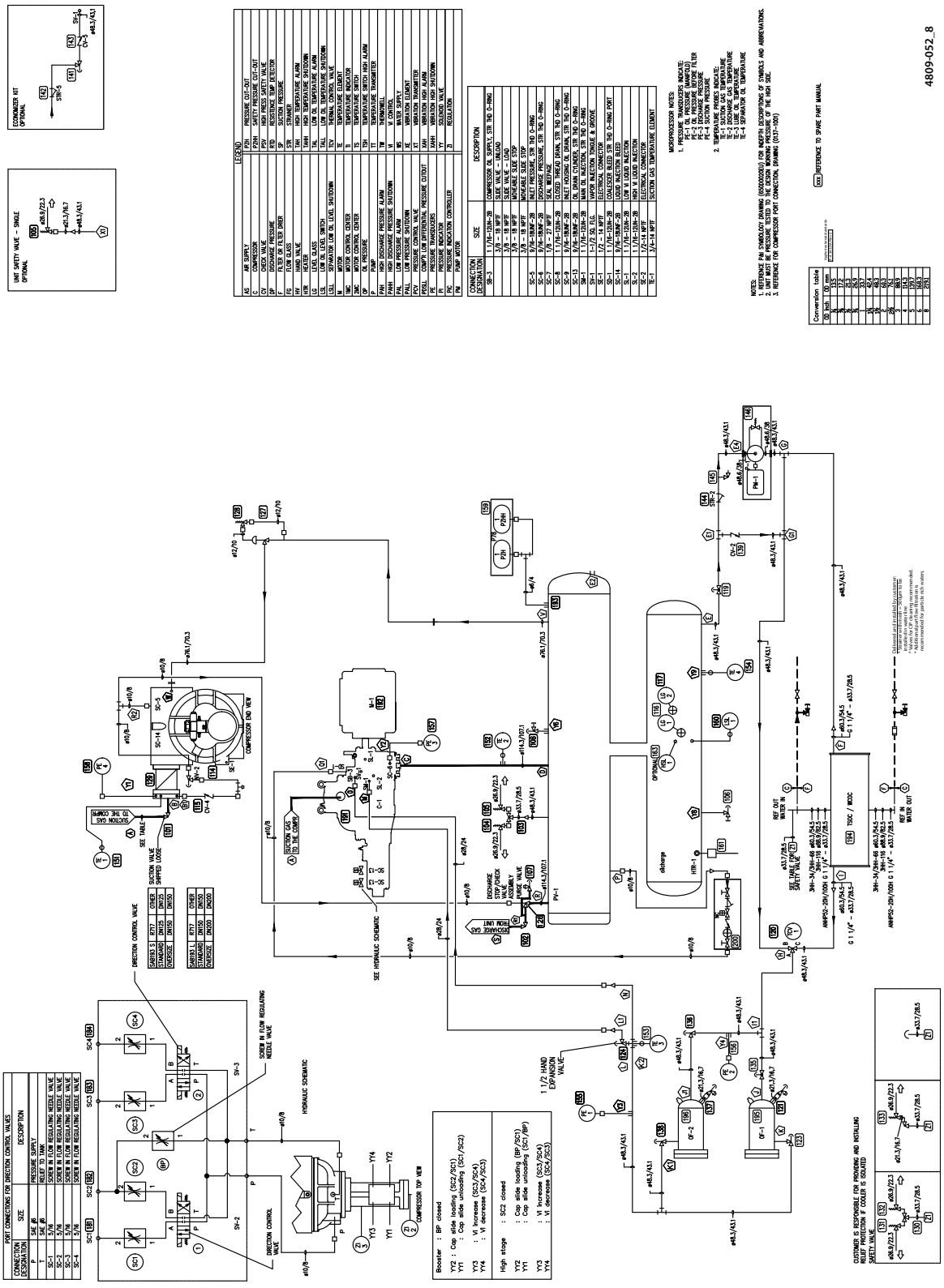

Fig. 17: General piping diagram - SAB 193 with OHU 04123 oil separator is shown here.

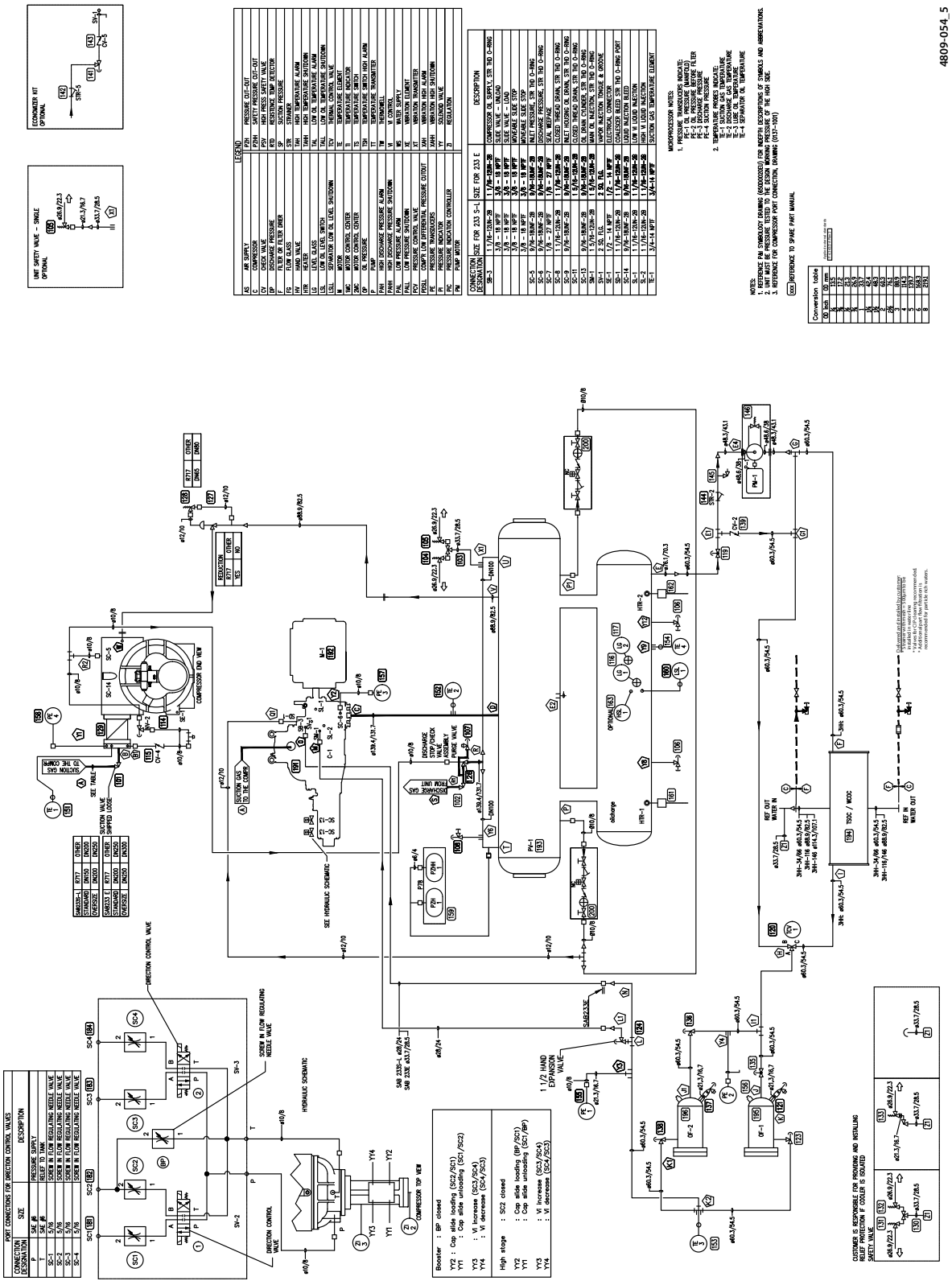

Fig. 18: General piping diagram - SAB 233 with OHU 04136 oil separator is shown here.

Legend (Covers all P&I diagrams in this manual)			
C	Compressor	TSH	Temperature switch high alarm
CV	Check valve	TW	Thermowell
DP	Discharge pressure	VI	Vi control
FG	Flow glass	SB-2	Inlet bearing and balance piston
HV	Hand valve	SB-3	Discharge bearings and seal
HTR	Heater	SC-1	Slide valve - unload
LG	Level glass	SC-2	Slide valve - load
LSLL	Separator low oil level shutdown	SC-3	Moveable slide stop
M	Motor	SC-4	Moveable slide stop
1MC	Motor control centre	SC-5	Inlet pressure
2MC	Motor control centre	SC-6	Discharge pressure
NOS	No oil switch	SC-7	Seal weepage
OF	Oil filter	SC-8	Oil drain connection
OP	Oil pressure	SC-9	Inlet housing oil drain
P	Demand pump	SC-13	Oil drain cylinder
PAH	High discharge pressure alarm	SE-1	Electrical connection
PAHH	High discharge pressure shutdown	SE-2	Electrical connection
PAL	Low pressure alarm	SL-1	Liquid injection low Vi
PALL	Low pressure shutdown	SL-2	Liquid injection high Vi
PDAH	High pressure differential alarm	SM-1	Main oil injection
PDI	Pressure differential indicator	SV-1	Vapour injection tongue and groove
PDSLL	Compressor low diff. pressure cut-out	SD-1	Coalescer bleed str trh O-ring port
		TW-1	Thermowell
PE	Pressure transducer	Pressure transducers indicate:	
PI	Pressure indicator	PE-1	Oil pressure (manifold)
PIC	Pressure indicator controller	PE-2	Oil pressure before filter
PM	Pump motor	PE-3	Discharge pressure
PS	Pressure switch control	PE-4	Suction pressure
PSV	High pressure safety valve	Temperature probes indicate:	
SP	Suction pressure	TE-1	Suction gas temperature
STR	Strainer	TE-2	Discharge gas temperature
TAH	High temperature alarm	TE-3	Lubricating oil temperature
TAHH	High temperature shutdown	TE-4	Separator oil temperature
TAL	Low oil temperature alarm	Solenoid valve function:	
TALL	Low oil temperature shutdown	YY-1	Energise unload slide valve
TC	Temperature controller	YY-2	Energise increase volume rate
TCV	Thermal control valve	YY-3	Energise increase volume ratio
TE	Temperature element	YY-4	Energise decrease volume ratio
TI	Temperature indicator	YY-5	Solenoid valve
TS	Temperature switch	YY-9	Dual-port liquid injection solenoid

Note: The 3-digit numbers do not refer to the spare parts list. They refer to the legend in the Operating manual and the Engineering, Service and Maintenance manual.

Johnson Controls Denmark ApS
SABROE Factory
Christian X's Vej 201 · 8270 Højbjerg
Denmark
Phone +45 87 36 70 00
www.sabroe.com

